IC Guide Book

SYNTHESIZER
COMBO KEYBOARD
P.A. & ENSEMBLE SYSTEM

YAMAHA

006406

friend,

Thank you for your interest in this document. Please do not sell copies of it, or charge any money for it.

Learn from it, Love it. Respect those who worked Thousands of hours to develop it.

Regards....

Loscha

www.Loscha.com

INDEX

TC4019BP	iG00170
TC4022BP	iG02750
TC4027BP	iG00125
TC4028BP	iG03580
TC4030BP	iG00179
TC4049BP	iG00126
TC4050BP	iG00174
TC4051BP	iG00177
TC4069UBP	iG00172
TC4071BP	iG00144
TC4072BP	iG03630
TC4073BP	iG00173
TC4075BP	iG03570
TC4081BP	iG00176
TC4532BP	iG03560
YM24800	YM24800
YM25200	YM25200
YM25300	YM25300
YM25301	YM25301
YM25400	YM25400
YM26600	YM26600
YM26700	YM26700
YM60800	iT60800
YM61200	iT61200
YM61500	iT61500

AND-OR Select Gate . . . . . 3 - 8
Counter . . . . . 3 - 9
J-K Flip-Flop . . . . . 3 - 10
Decoder . . . . . 3 - 11
EX-OR Gate . . . . . 3 - 12
Inverter . . . . . 3 - 13
Converter . . . . . 3 - 14
8ch Multiplexer . . . . . 3 - 15
Inverter . . . . . 3 - 16
2-input OR . . . . . 3 - 17
4-input OR . . . . . 3 - 18
3-input AND . . . . . 3 - 19
3-input OR . . . . . 3 - 20
2-input AND . . . . . 3 - 21
Encoder . . . . . 3 - 22
SSK . . . . . 1 - 1
Keyer . . . . . 1 - 2
Keyer . . . . . 1 - 2
Keyer . . . . . 1 - 2
DTG . . . . . 1 - 3
Channel Processor II . . . . . 1 - 4
D-A Converter . . . . . 1 - 5
SEC . . . . . 1 - 6
KAS & DTG . . . . . 1 - 7
SKA . . . . . 1 - 8

INDEX

YM61600	iT61600	PGM Controller	1 - 9
YM61700	iT61700	SMD	1 - 10
μA310H	iG00121	OP. Amp	4 - 8
μA796HC	iG00162	Ring Modulator	8 - 15
μPC271C	iG03620	Comparator	4 - 9

IC		Page	Synthesizer											Combo Keyboard								P. A.														
	Applied Model		CS−5	CS−10	CS−15	CS−30	CS−30L	CS−50	CS−60	CS−80	CS−20M	CS−40M	CS15D	SS−30	SK10	CP10	CP−20	CP−30	CP−70, 70B, 80	YC−10, 20, 30	YC−25D, 45D	EM−85	EM−100II, 150II	EM−200, 300	PM−170, 180	PM−210	PM−430	PM−700	PM−2000	A4115H	E1010	E1005	F1030	F1040	Q1027		
YAMAHA LSI	YM24800	1−1	○	○	○	○	○						○																							
	YM25200	1−2															○	○																		
	YM25300	1−2															○	○																		
	YM25301	1−2															○	○																		
	YM25400	1−3												○						○	○															
	YM26600	1−4						○	○	○																										
	YM26700	1−5						○	○	○																										
	YM60800	1−6													○																					
	YM61200	1−7													○	○																				
	YM61500	1−8									○	○																								
	YM61600	1−9									○	○																								
	YM61700	1−10									○	○																								
Synthesizer IC	iG00150	2−1	○	○	○	○	○	○	○	○	○	○	○																							
	iG00151	2−2	○	○	○	○	○	○	○	○	○	○	○																							
	iG00152	2−3		○		○	○	○	○	○																										
	iG00153	2−4	○	○	○	○	○	○	○	○	○	○	○																							
	iG00156	2−5	○	○	○	○	○	○	○	○	○	○	○																							
	iG00158	2−6				○	○	○	○	○	○	○																								
	iG00159	2−7		○		○	○	○	○	○	○	○	○																							
C²MOS IC	TC4006BP	3−1							○	○																										
	TC4007UBP	3−2											○																							
	TC4011BP	3−3				○		○	○	○		○										○														
	TC4013BP	3−4							○	○		○																								
	TC4016BP	3−5				○		○	○	○	○	○		○	○	○																				
	TC4017BP	3−6										○																								

	IC	Page	Synthesizer											Combo Keyboard								P. A.														
	Applicd Model		CS−5	CS−10	CS−15	CS−30	CS−30L	CS−50	CS−60	CS−80	CS−20M	CS−40M	CS15D	SS−30	SK10	CP10	CP−20	CP−30	CP−70, 70B, 80	YC−10, 20, 30	YC−25D, 45D	EM−85	EM−100II, 150II	EM−200, 300	PM−170, 180	PM−210	PM−430	PM−700	PM−2000	A4115H	E1010	E1005	F1030	F1040	Q1027		
C²MOS IC	TC40175BP	3−7									○	○																								
	TC4019BP	3−8								○																										
	TC4022BP	3−9				○																														
	TC4027BP	3−10												○																						
	TC4028BP	3−11									○	○																								
	TC4030BP	3−12									○	○																								
	TC4049BP	3−13		○		○	○		○	○		○			○															○						
	TC4050BP	3−14						○	○		○	○																								
	TC4051BP	3−15								○			○																							
	TC4069UBP	3−16	○		○	○		○		○	○	○	○									○														
	TC4071BP	3−17								○		○																								
	TC4072BP	3−18										○																								
	TC4073BP	3−19							○	○																										
	TC4075BP	3−20										○																								
	TC4081BP	3−21								○		○																								
	TC4532BP	3−22									○	○																								
OP. Amp	CA3080	4−1																○																		
	CA3140	4−2						○	○	○																										
	NJM2901	4−3									○	○																								
	NJM4558D	4−4	○	○	○	○	○	○	○	○	○	○	○	○	○	○	○	○	○				○	○								○				
	TA7504S	4−5		○	○	○	○	○	○	○	○	○	○																							
	TA7505M	4−6	○	○	○	○	○	○	○	○	○	○	○																							
	TA7531M	4−7									○	○																								
	μA310H	4−8						○	○	○	○	○																								
	μPC271C	4−9									○	○																								

	IC	Page	Synthesizer												Combo Keyboard									P. A.														
	Applied Model		CS－5	CS－10	CS－15	CS－30	CS－30L	CS－50	CS－60	CS－80	CS－20M	CS－40M	CS15D		SS－30	SK10	CP10	CP－20	CP－30	CP－70,70B,80	YC－10,20,30	YC－25D,45D		EM－85	EM－100II,150II	EM－200,300	PM－170,180	PM－210	PM－430	PM－700	PM－2000	A4115H	E1010	E1005	F1030	F1040	Q1027		
Audio Amp.	HA1452W	5－1				○	○	○	○	○					○																								
	HA1457W	5－2																							○	○					○								
	TA7136P	5－3																							○	○	○	○	○	○		○		○					
	TA7202P	5－4																													○								
	TA7203P	5－5																									○	○	○	○									
	TA7317P	5－6																							○											○	○		
	TA7322P	5－7																																		○	○		
Regulator	TA7084AM	6－1																													○								
	TA7085AM	6－2																													○								
	TA7179P	6－3	○		○																																		
BBD	MN3001	7－1								○																													
	MN3004	7－2													○																		○	○					
	MN3005	7－3																						○									○	○					
	MN3006	7－4														○																✓							
Other's	BA617	8－1						○	○	○	○	○												○									○	○					
	BA634	8－2				○	○				○	○																											
	iG02600	8－3														○	○																						
	iG03290	8－4														○																							
	LB1405	8－5																															○	○					
	LM3211	8－6													○						○	○																	
	M54516P	8－7									○	○																											
	M58981S－45	8－8										○																											
	M5L5101LP－1	8－9									○																												
	MM5837	8－10																													○								

	IC \ Applied Model	Page	Synthesizer												Combo Keybord									P. A.															
			CS−5	CS−10	CS−15	CS−30	CS−30L	CS−50	CS−60	CS−80	CS−20M	CS−40M	CS15D		SS−30	SK10	CP10	CP−20	CP−30	CP−70,70B,80	YC−10,20,30	YC−25D,45D		EM−85	EM−100II,150II	EM−200,300	PM−170,180	PM−210	PM−430	PM−700	PM−2000	A4115H	E1010	E1005	F1030	F1040	Q1027			
Other's	MN3101	8−11																																○					
	NE570N,571N	8−12																						○									○	○					
	NE80100	8−13																									○		○	○	○				○				
	NE80200	8−14																													○								
	μA796HC	8−15				○	○	○	○	○		○																											

YM24800

Part No.	YM24800
made by	YAMAHA

• FUNCTION

Single Synthesizer key Assigner

• OUTLINE DRAWING

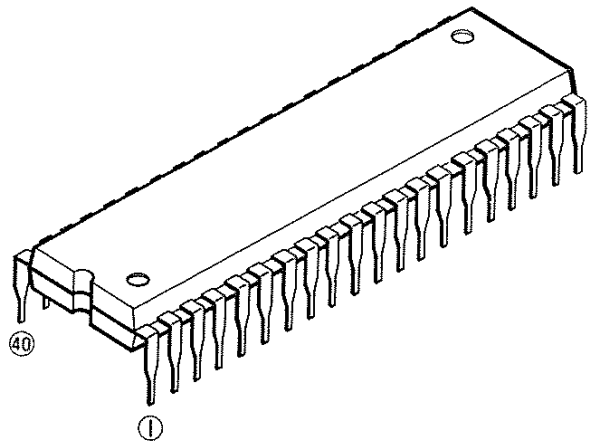

No.	Name	Description	No.	Name	Description
1	V_{SS}	+DC voltage supply	40	V_{DD}	−DC voltage supply
2	K_7	F#, C	39	N0	Key voltage output
3	K_6	F, B	38	C	
4	K_5	E, A#	37	B	
5	K_4	D#, A Note Data Input	36	A#	
6	K_3	D, G#	35	A	
7	K_2	C#, G	34	G#	
8	K_1	CL (Lowest C Note Data Input)	33	G	
9	K_0	Key on trigger	32	F#	
10	KOD	Key On Data (CS-5,15:Not used)	31	F	Key voltage input
11	K42	(37 keys: Not used)	30	E	
12	K41	〃	29	D#	
13	K32		28	D	
14	K31	1/2 Octave Data	27	C#	
15	K22		26	C_1	
16	K21		25	00	Octave voltage output
17	K12		24	04	(37 keys: Not used)
18	K11		23	03	
19	ϕ	Clock Pulse input	22	02	Octave voltage input
20	IC	Initial Clear	21	01	

BLOCK & SCHEMATIC DIAGRAM

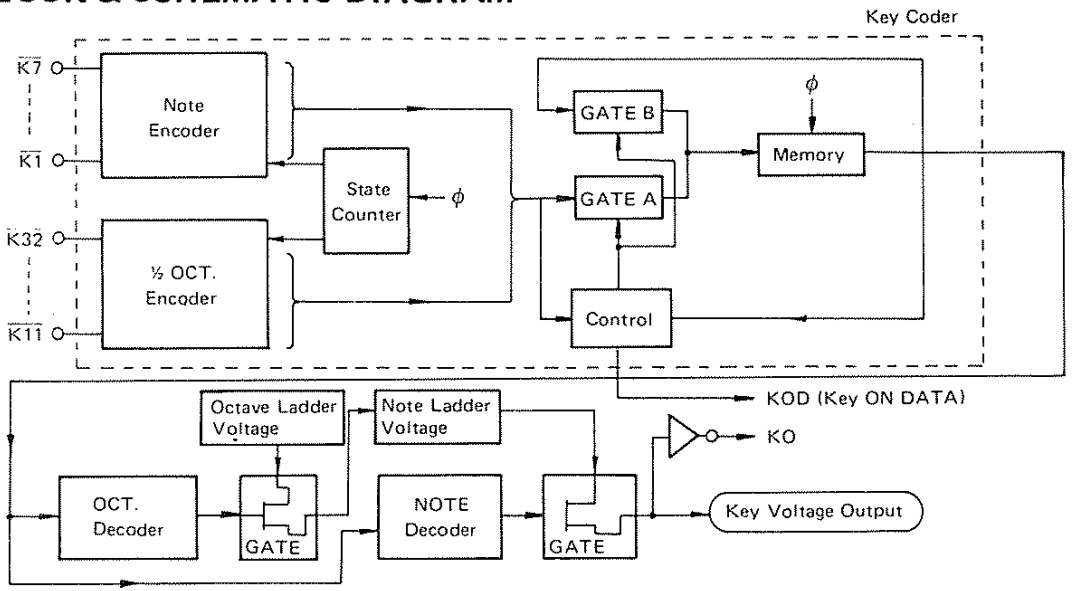

CIRCUIT ILLUSTRATION

MODEL **CS-5**

CIRCUIT BOARD . . **PN1 2/2**

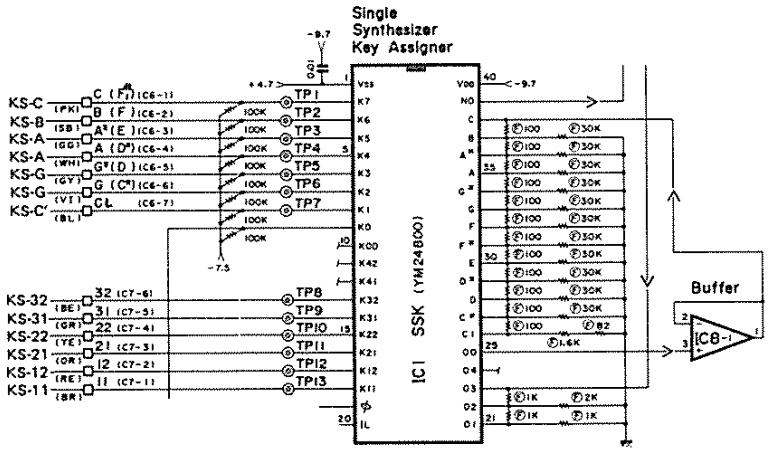

YM 25200 25300

Part No.	YM25200/25300
made by	YAMAHA

● FUNCTION

Keyer

● OUTLINE DRAWING

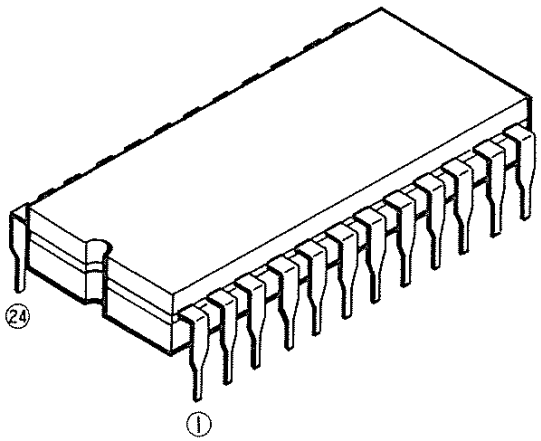

No.	Name	Description	No.	Name	Description
1	Vss	GND (Analog) 0v	24	Vss	GND (Digital) 0v
2	Out 5	Clock output	23	S_3	Data input (GND)
3	A_7	Analog input	22	H_1	Analog input
4	A_8		21	A_1	
5	A_9		20	A_2	
6	A_{10}		19	A_3	
7	A_{11}		18	A_4	
8	A_{12}		17	A_5	
9	A_{13}		16	A_6	
10	VDD	−15V DC voltage supply	15	CLOCK	Clock input
11	Out 4	Non-connection	14	Out 3	Non-connection
12	Out 1	SUSTAIN Output	13	Out 2	ATTACK Output

BLOCK & SCHEMATIC DIAGRAM

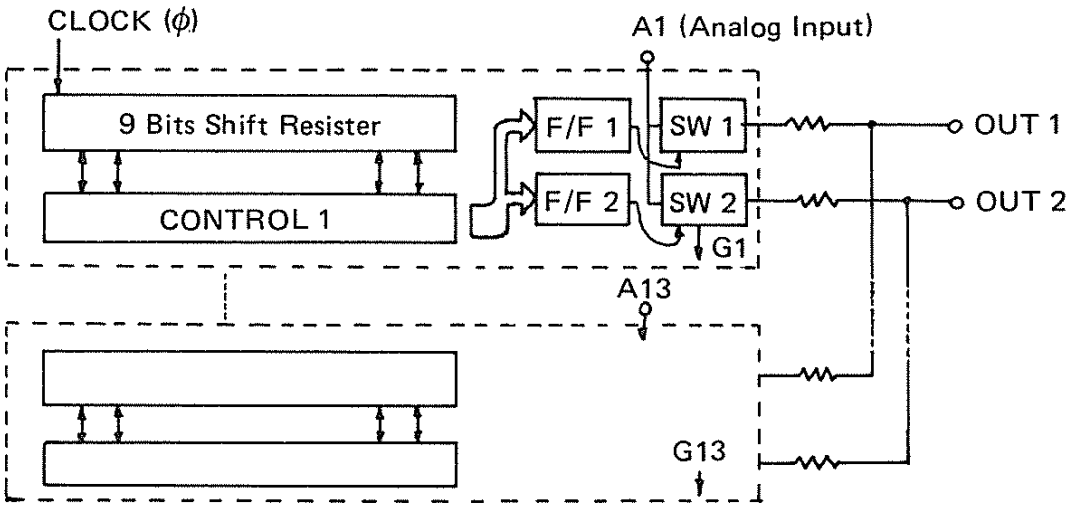

CIRCUIT ILLUSTRATION

MODEL **CP-30**

CIRCUIT BOARD . . **G1**

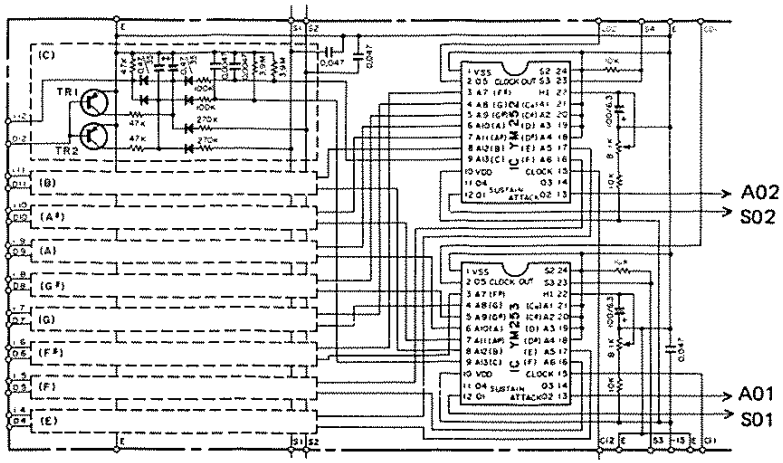

YM25400

Part No.	YM25400
made by	YAMAHA

• FUNCTION

DIGITAL TONE GENERATOR

• OUTLINE DRAWING

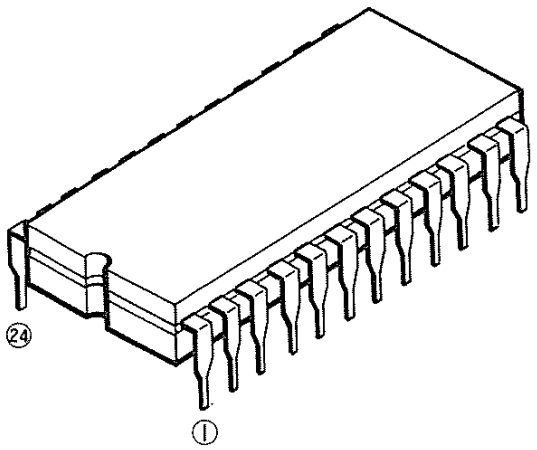

No.	Name	Description	No.	Name	Description
1	Vss	0V DC voltage supply	24	NC	Non-connection
2	NC	Non-connection	23	NC	Non-connection
3	Reset	Reset data input ⇒ to GND	22	O_{11}	C
4	O_{11}	A#	21	O_{13}	C_1
5	O_{10}	A	20	O_{12}	B
6	O_7	F# — Signal output	19	O_9	G# — Signal output
7	O_6	F	18	O_8	G
8	O_4	D#	17	O_5	E
9	O_3	D	16	O_2	C#
10	CLOCK	Master clock input	15	O_{14}	ϕ (Master Clock) output
11	$\overline{A_1}$	Octave change	14	VGG	−15V DC voltage supply
12	$\overline{A_2}$		13	VDD	−9V DC voltage supply

BLOCK & SCHEMATIC DIAGRAM

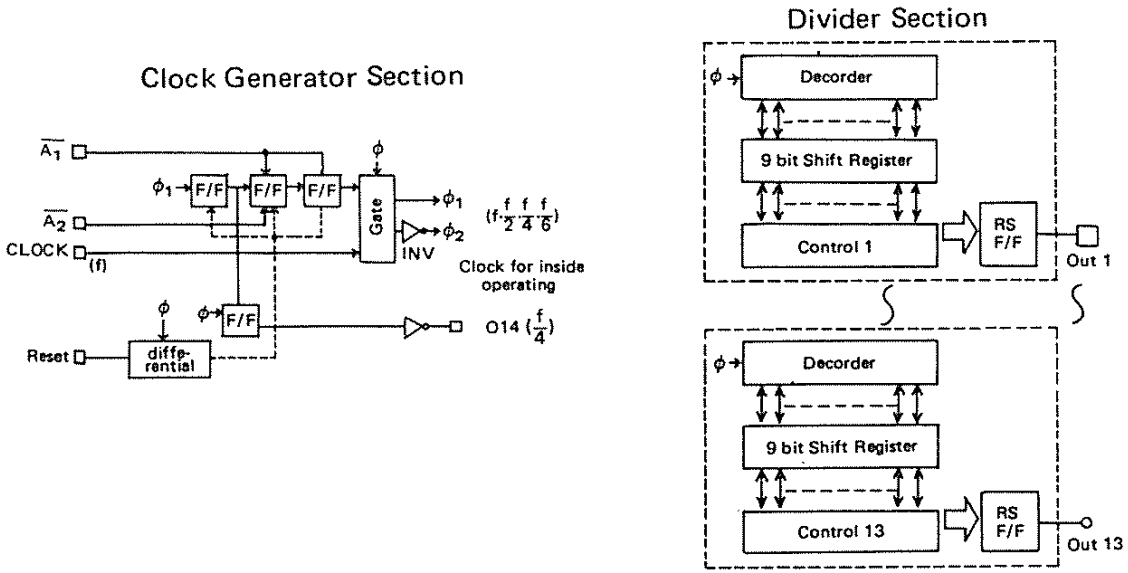

CIRCUIT ILLUSTRATION

MODEL **SS-30**

CIRCUIT BOARD . . **G**

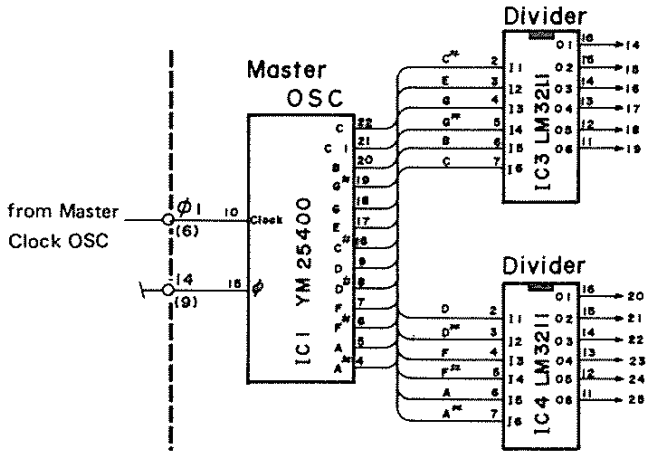

YM26600

Part No.	YM26600
made by	YAMAHA

- **FUNCTION**

Channel Processer II

- **OUTLINE DRAWING**

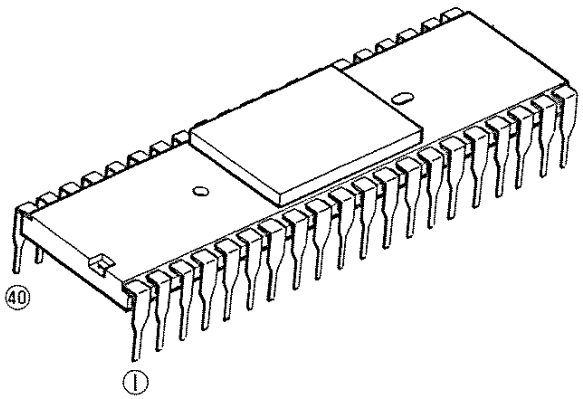

No.	Name	Description	No.	Name	Description
1	Vss	+8.5V DC voltage supply	40	MODE	Pronouncing mode switch
2	ϕ	Master clock input (94±5KHz)	39	K08	Key ON data output
3	SC	Synchronized clock ($\frac{1}{9}\phi$)	38	K07	
4	SC8	1/8 SC clock output	37	K06	
5	IC	Initial clear	36	K05	
6	VDD	−6.5V voltage supply	35	K04	
7	CL	Note Data	34	K03	
8	C#		33	K02	
9	D		32	K01	
10	D#		31	$\overline{B_3}$	Octave code data output (3 bit)
11	E		30	$\overline{B_2}$	
12	F		29	$\overline{B_1}$	
13	F#		28	$\overline{N_4}$	Note code data output (4 bit)
14	G		27	$\overline{N_3}$	
15	G#		26	$\overline{N_2}$	
16	A		25	$\overline{N_1}$	
17	A#		24	$\overline{U_5}$	Octave Data
18	B		23	$\overline{U_4}$	
19	C		22	$\overline{U_3}$	
20	$\overline{U_1}$	*	21	$\overline{U_2}$	*

BLOCK & SCHEMATIC DIAGRAM

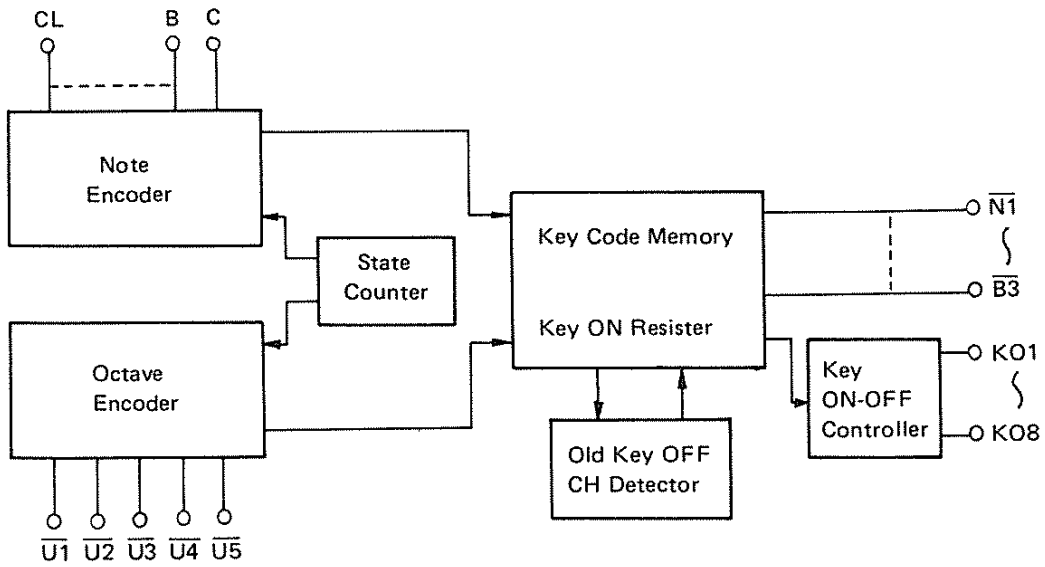

CIRCUIT ILLUSTRATION

MODEL **CS-80**

CIRCUIT BOARD . . **KAS**

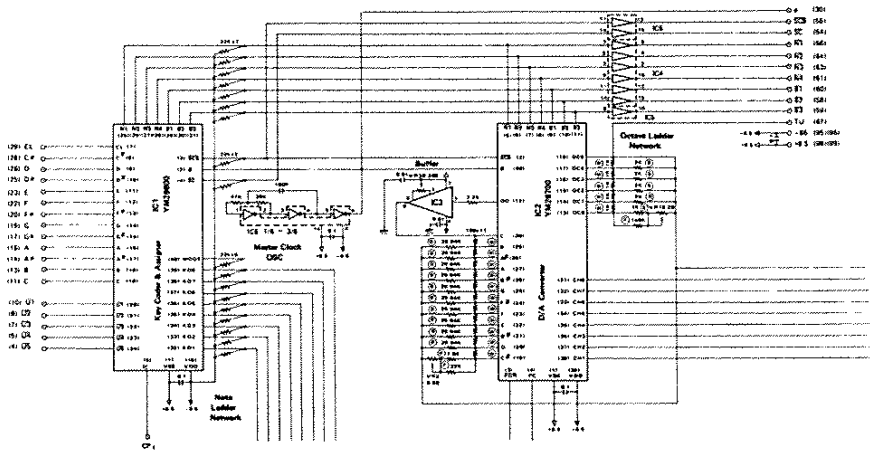

YM26700

Part No.	YM26700
made by	YAMAHA

- **FUNCTION**

D-A converter

- **OUTLINE DRAWING**

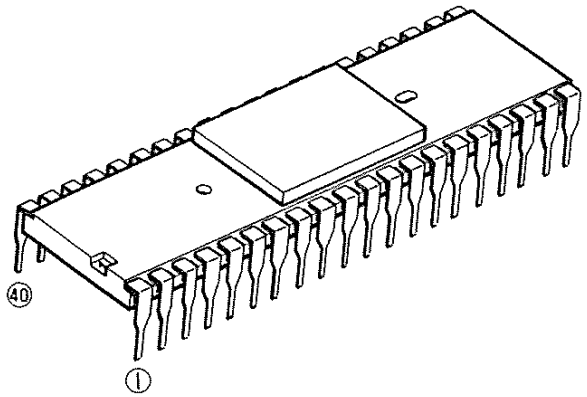

No.	Name	Description	No.	Name	Description
1	Vss	+8.5v DC voltage supply	40	ϕ	Master clock input
2	$\overline{SC8}$	1/8 $\overline{SC}$ clock input	39	VDD	−6.5V DC voltage supply
3	$\overline{POR}$	Portamento control	38	CH_1	
4	$\overline{PC}$	Clock input for POR.operation	37	CH_2	
5	$\overline{N1}$		36	CH_3	
6	$\overline{N_2}$	Note code data input	35	CH_4	
7	$\overline{N_3}$		34	CH_5	Key voltage output
8	$\overline{N_4}$		33	CH_6	
9	$\overline{B_1}$		32	CH_7	
10	$\overline{B_2}$	Octave code data input	31	CH_8	
11	$\overline{B_3}$		30	C	
12	OO	Octave key voltage output	29	B	
13	OC_0		28	$A^{\#}$	
14	OC_1		27	A	
15	OC_2	Octave key voltage output	26	$G^{\#}$	
16	OC_3		25	G	
17	OC_4		24	$F^{\#}$	
18	OC_5		23	F	Input for note key voltage
19	$C^{\#}$		22	E	
20	D	*	21	$D^{\#}$	*

BLOCK & SCHEMATIC DIAGRAM

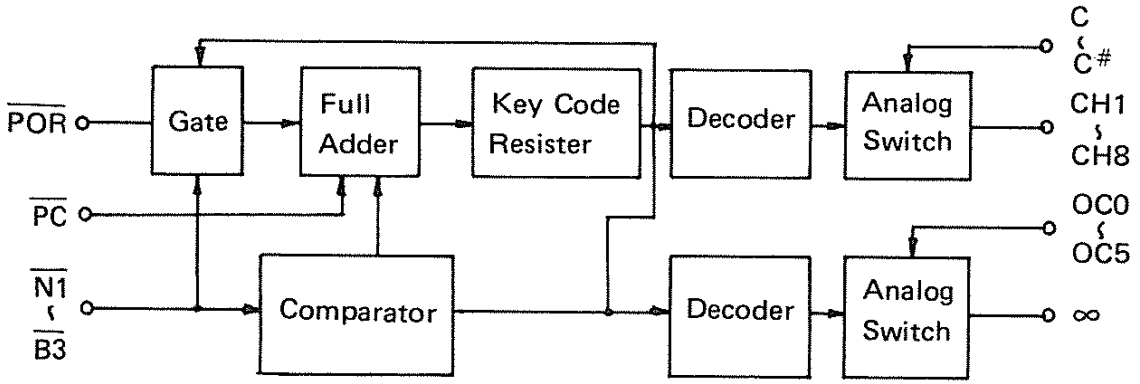

CIRCUIT ILLUSTRATION

MODEL **CS-80**

CIRCUIT BOARD . . **KAS**

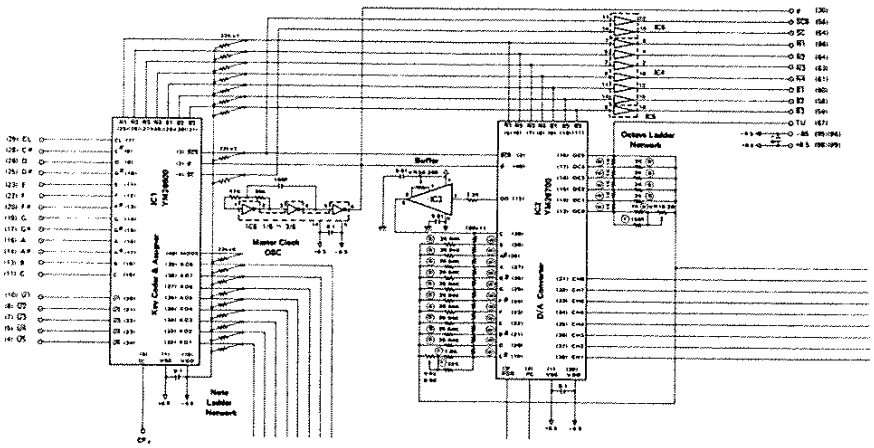

YM60800

Part No.	iT60800
made by	YAMAHA

- FUNCTION
  SEC
  (String Ensemble Clock Generator)

- OUTLINE DRAWING

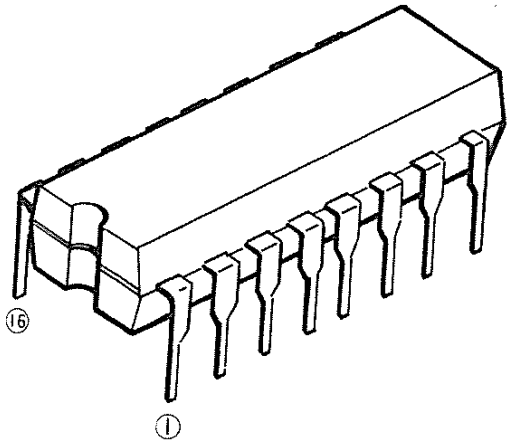

- BLOCK & SCHEMATIC DIAGRAM

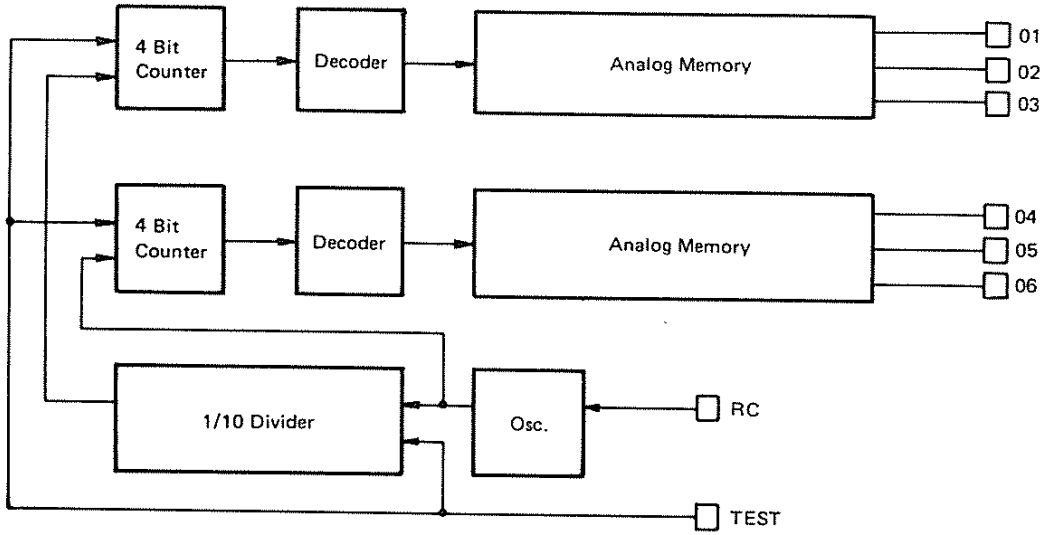

No.	Name	Description		No.	Name	Description
1	O_3	Output 3	f = 6.4Hz	16	–5V	–5V DC voltage supply
2	O_2	Output 2	"	15	V DD	–15V DC voltage supply
3	O_1	Output 1	"	14	NC	Non-connection
4	A GND	Ground		13	NC	
5	O_4	Output 4	f = 0.64Hz	12	NC	
6	O_5	Output 5	"	11	NC	
7	O_6	Output 6	"	10	RC	RC for oscillator
8	Vss	DC voltage supply (= GND)		9	TEST	Test

• CIRCUIT ILLUSTRATION

MODEL **SK10**

CIRCUIT BOARD . . **ENS**

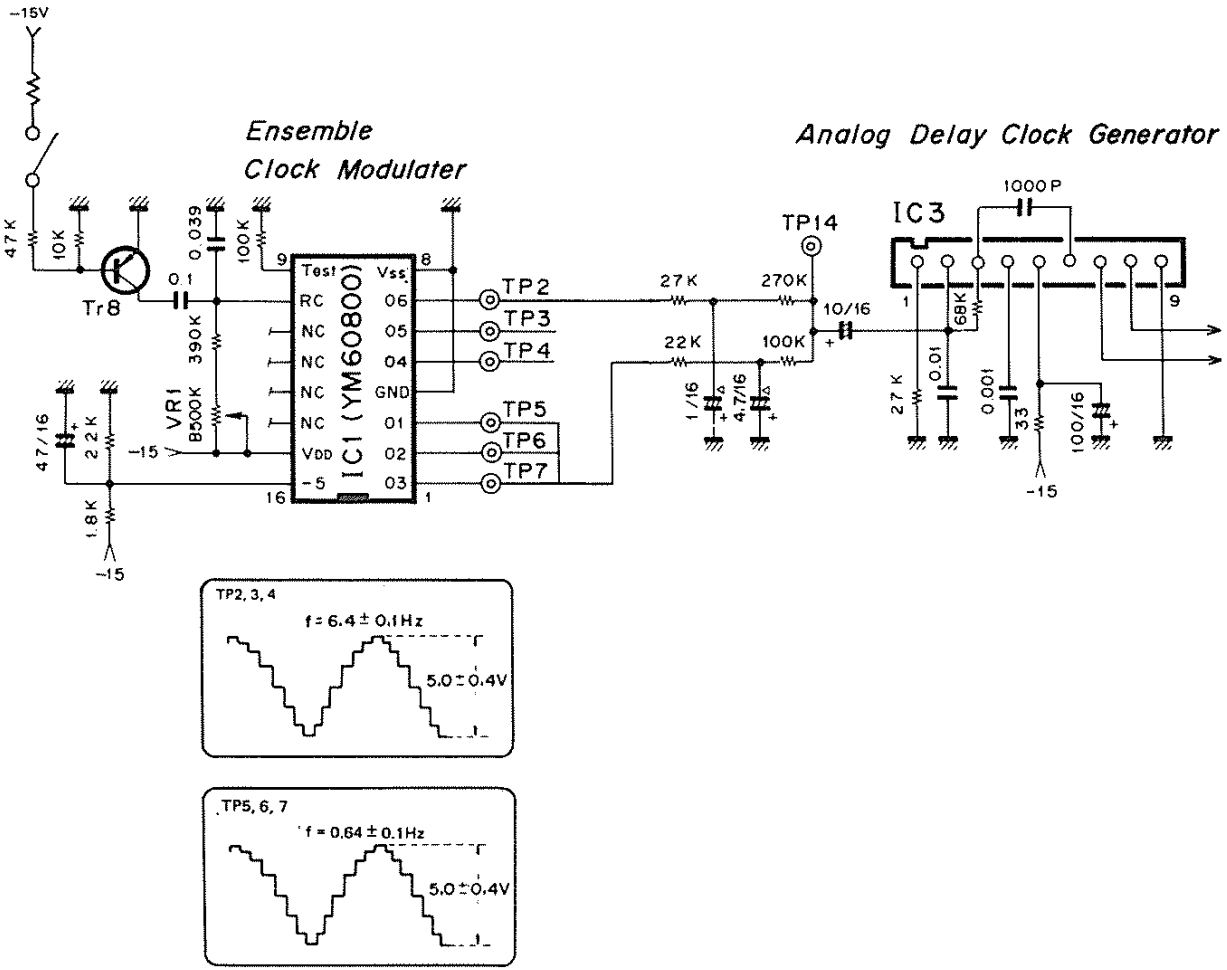

YM61200

Part No.	iT61200
made by	YAMAHA

- **FUNCTION**

KAS, DTG

- **OUTLINE DRAWING**

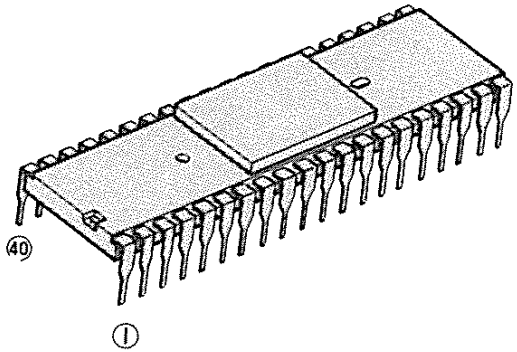

No.	Name	Description	No.	Name	Description
1	Vss	Power Source 0V	40	B52	Block data $G_5 \sim C_6$
2	IC	Initial clear IN	39	B51	– do. – $C\#_5 \sim F\#_5$
3	N1	Note data C_1	38	B42	– do. – $G_4 \sim C_5$
4	N2	– do. – C, G	37	B41	– do. – $C\#_4 \sim F\#_4$
5	N3	– do. – D, G#	36	B32	– do. – $G_3 \sim C_4$
6	N4	– do. – D#, A	35	B31	– do. – $C\#_3 \sim F\#_3$
7	N5	– do. – E, A#	34	B22	– do. – $G_2 \sim C_3$
8	N6	– do. – F, B	33	B21	– do. – $G\#_2 \sim F\#_2$
9	N7	– do. – F#, C	32	B12	– do. – $G_1 \sim C_2$
10	TEST	Not used	31	B11	– do. – $C_1 \sim F\#_1$
11	KC1	– do. –	30	ϕ	Master clock 1MHz IN
12	KC2	– do. –	29	DVDD	Digital power source –15V
13	KC3	– do. –	28	AVDD	Analog power source –15V
14	KC4	– do. –	27	MK2′	2′ sound source OUT
15	AGND	Analog ground 0V	26	MK4′	4′ – do. –
16	–5V	Power source –5V	25	MK8′	8′ – do. –
17	C1	MK envelope	24	C8	MK envelope
18	C2	– do. –	23	C7	– do. –
19	C3	– do. –	22	C6	– do. –
20	C4	– do. –	21	C5	– do. –

• CIRCUIT ILLUSTRATION

MODEL **CP10**

CIRCUIT BOARD .. **MA**

〈 BLOCK DIAGRAM 〉

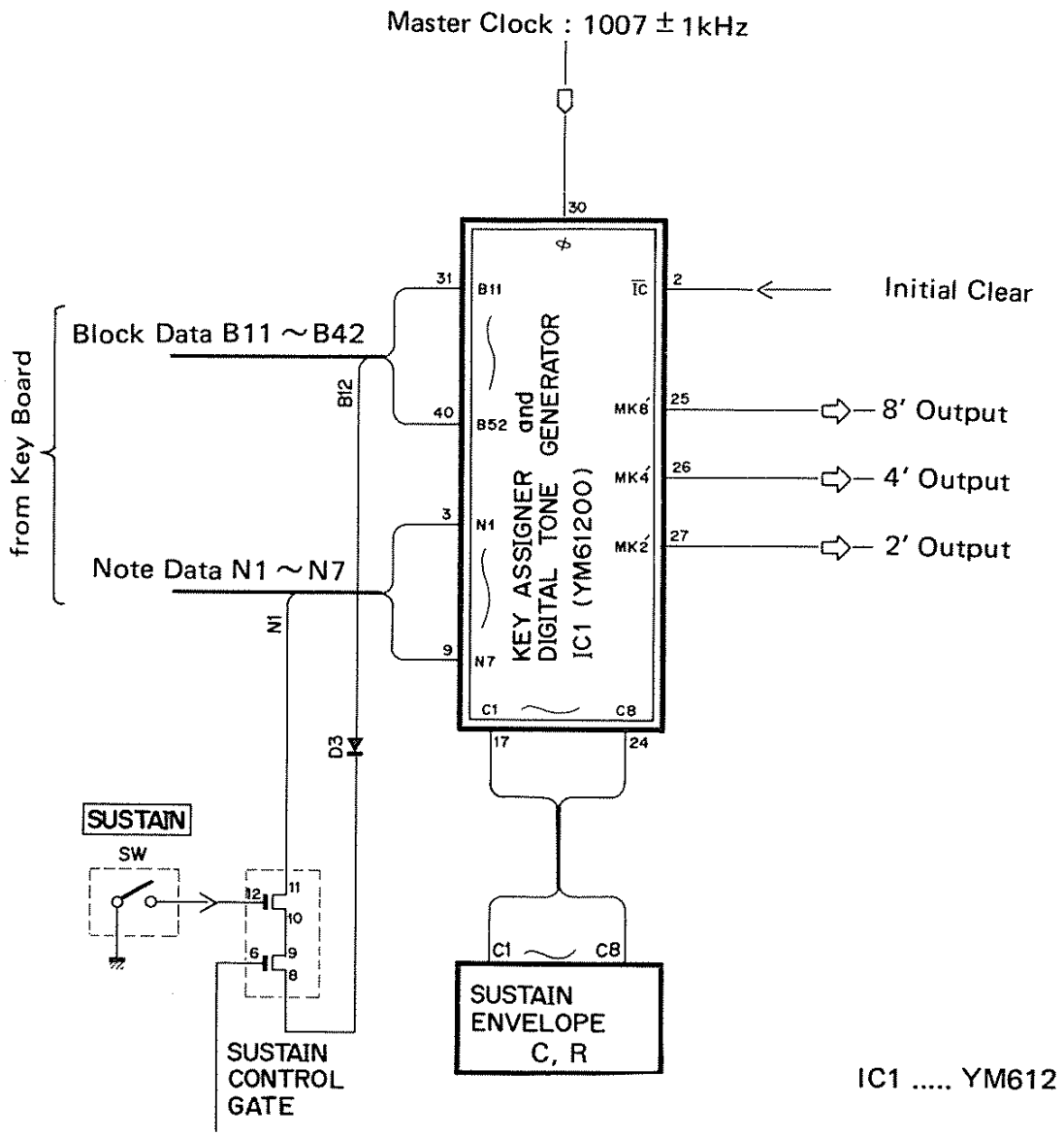

IC1 ..... YM612

YM61500

Part No.	iT61500
made by	YAMAHA

- **FUNCTION**
  SKA
  (Synthesizer Key Assigner)

- **OUTLINE DRAWING**

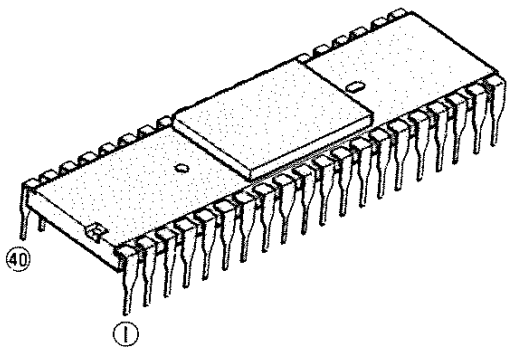

No.	Name	Description	No.	Name	Description
1	Vss	+5V Power Supply	40	ϕ	Master Clock
2	IC	Initial Clear Input	39	VDD	−10V Power Supply
3	$\overline{PC}$	Glissand Clock Input	38	KO_1	KON (Trigger) Output
4	KB_1		37	KO_2	
5	KB_2		36	CH_1	KV (Key voltage) Output
6	KB_3		35	CH_2	
7	KB_4	Semi Octave Code Input	34	C-F#	
8	KB_5		33	B-F	
9	KB_6		32	A#-E	Note D/A Terminals
10	KB_7		31	A-D#	
11	KB_8		30	G#-D	
12	KN_0		29	G-C#	
13	KN_1		28	OC_8	
14	KN_2		27	OC_7	
15	KN_3	Note Code Input	26	OC_6	
16	KN_4		25	OC_5	
17	KN_5		24	OC_4	Octave D/A Terminals
18	KN_6		23	OC_3	
19	OO		22	OC_2	
20	OC_0	*	21	OC_1	*

• CIRCUIT ILLUSTRATION

〈 BLOCK DIAGRAM 〉

MODEL **CS-40M**

CIRCUIT BOARD . . **SK**

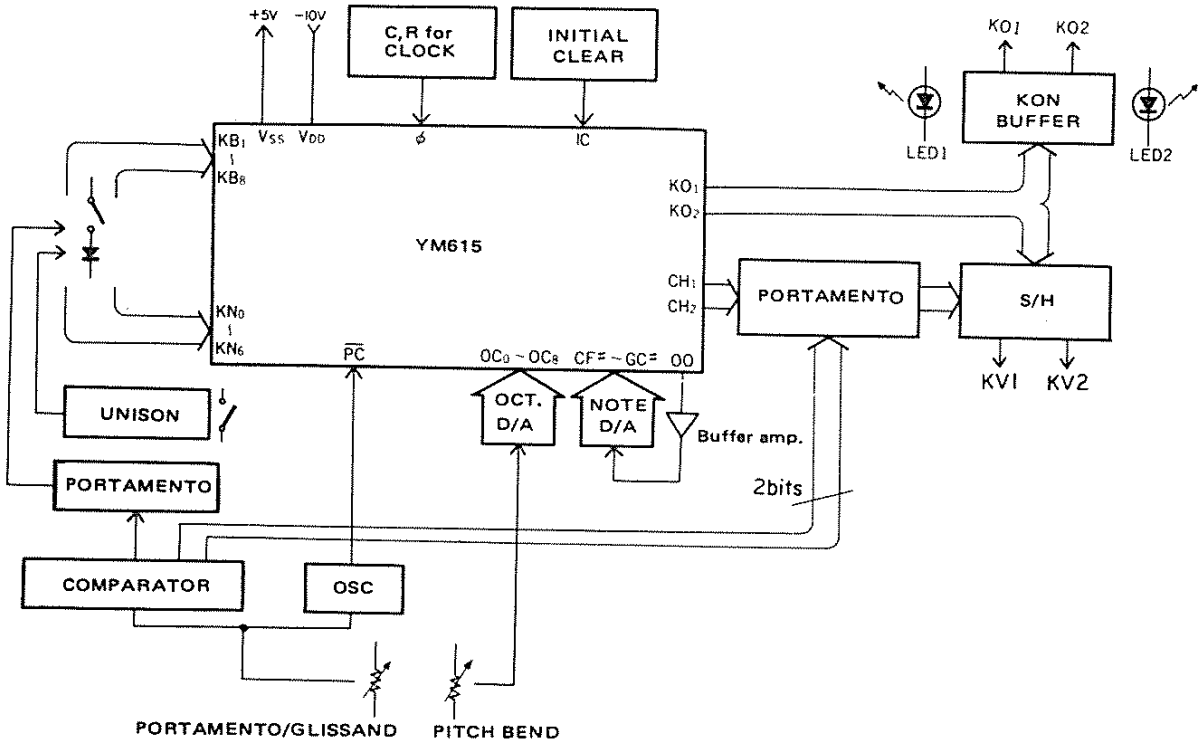

Refer to CS-20M/40M HARDWARE MANUAL for the circuit diagram in detail.

YM61600

Part No.	iT61600
made by	YAMAHA

- **FUNCTION**

PROGRAM CONTROLLER

- **OUTLINE DRAWING**

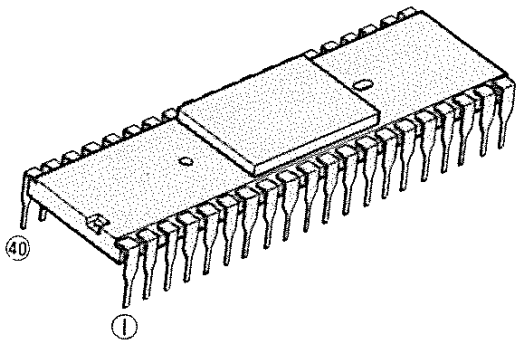

No.	Name	Description	No.	Name	Description
1	Vss	+5V Power Supply	40	ϕ	Master Clock Input
2	F_0	Function Data Output	39	VDD	−10V Power Supply
3	CMP	Input for A/D Convert	38	SY	Synchronize Pulse Input
4	Fi	Function Data Input	37	$\overline{A}_9$	Address Data Output
5	SMP	Sample and Hold Control	36	$\overline{A}_8$	
6	IC	Initial clear Input	35	$\overline{A}_7$	
7	B_7	Bit Data Output	34	$\overline{A}_6$	
8	B_6		33	$\overline{A}_5$	
9	B_5		32	$\overline{A}_4$	
10	B_4		31	$\overline{A}_3$	
11	B_3		30	$\overline{A}_2$	
12	B_2		29	$\overline{A}_1$	
13	B_1		28	A_0	
14	B_0		27	CE	Chip Select Output
15	−5V	−5V Power Supply	26	W	R/W Control
16	C_0	STORE Data Output	25	Ci	LOAD Data Input
17	$\overline{D}_0$	* Memory Data Input/Output	24	$\overline{D}_7$	*
18	$\overline{D}_1$		23	$\overline{D}_6$	
19	$\overline{D}_2$		22	$\overline{D}_5$	
20	$\overline{D}_3$		21	$\overline{D}_4$	

● CIRCUIT ILLUSTRATION

〈 BLOCK DIAGRAM 〉

MODEL **CS-40M**

CIRCUIT BOARD . . **PGM**

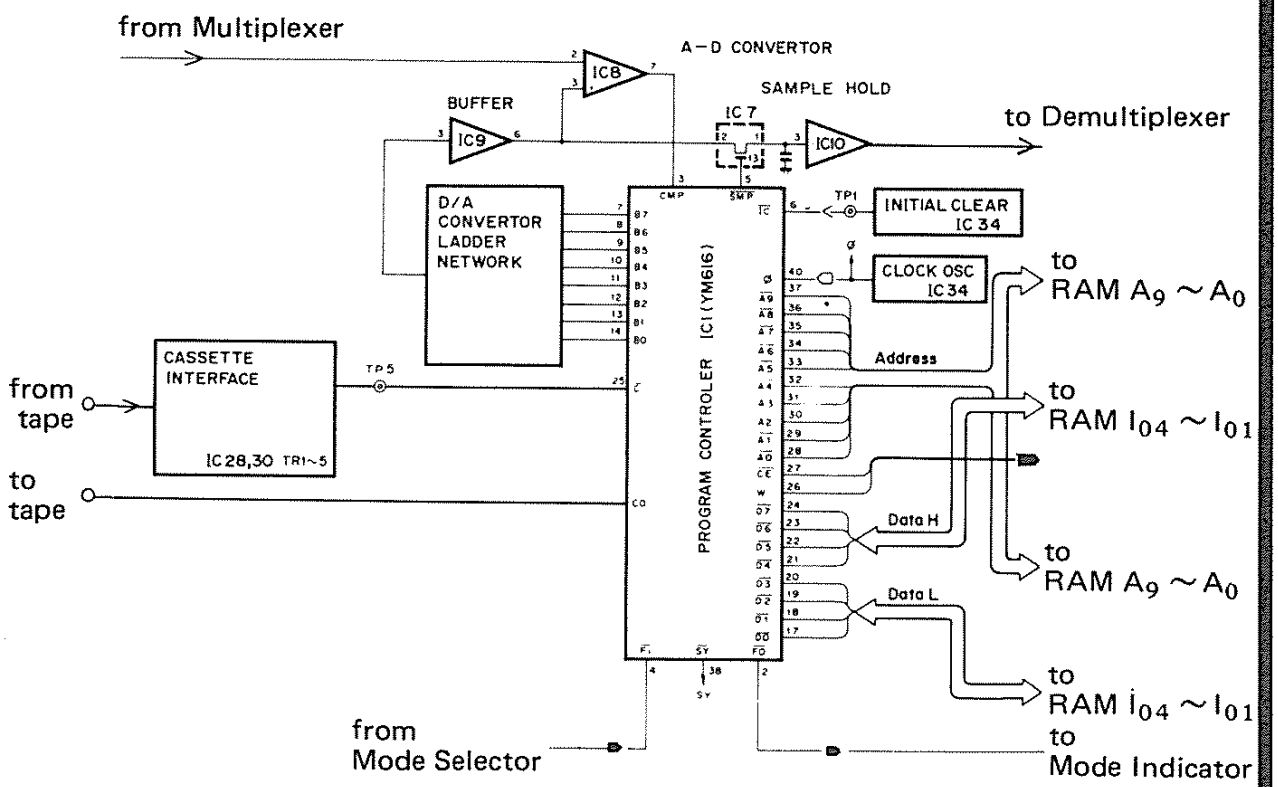

YM61700

Part No.	iT61700
made by	YAMAHA

- **FUNCTION**
  SMD
  (Synthesizer Multi/Demultiplexer)

- **OUTLINE DRAWING**

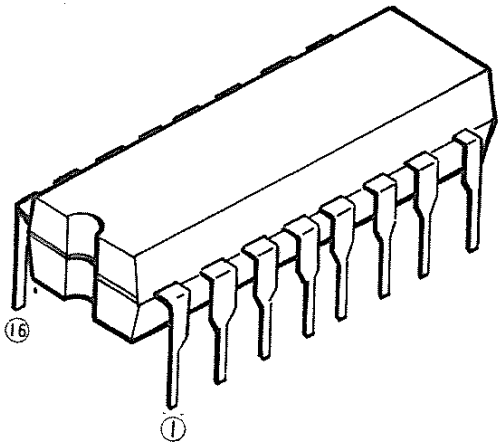

- **BLOCK & SCHEMATIC DIAGRAM**

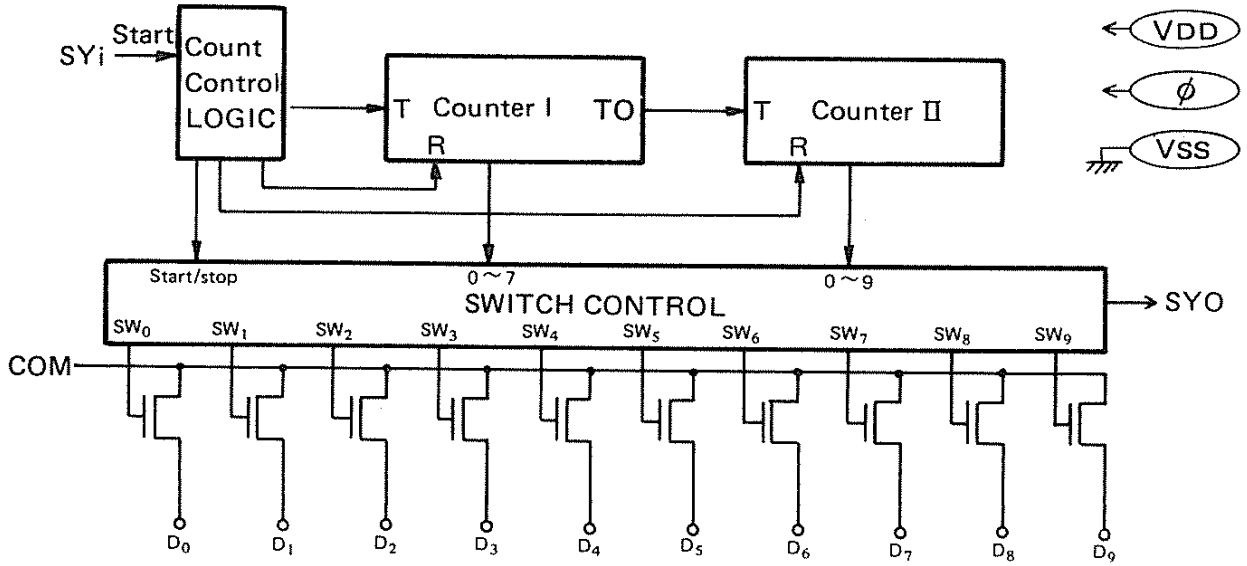

No.	Name	Description	No.	Name	Description
1	D_4	Switch Input/Output	16	COM	Switch Common
2	D_3		15	D_5	Switch Input/Output
3	D_2		14	D_6	
4	D_1		13	D_7	
5	D_0		12	D_8	
6	SYi	Synchro-pulse Input	11	D_9	
7	SYo	Synchro-pulse Output	10	VDD	−10V power supply
8	Vss	+5V power supply	9	ϕ	Clock pulse Input

● CIRCUIT ILLUSTRATION

MODEL **CS-40M**

CIRCUIT BOARD . **PGM, DM**

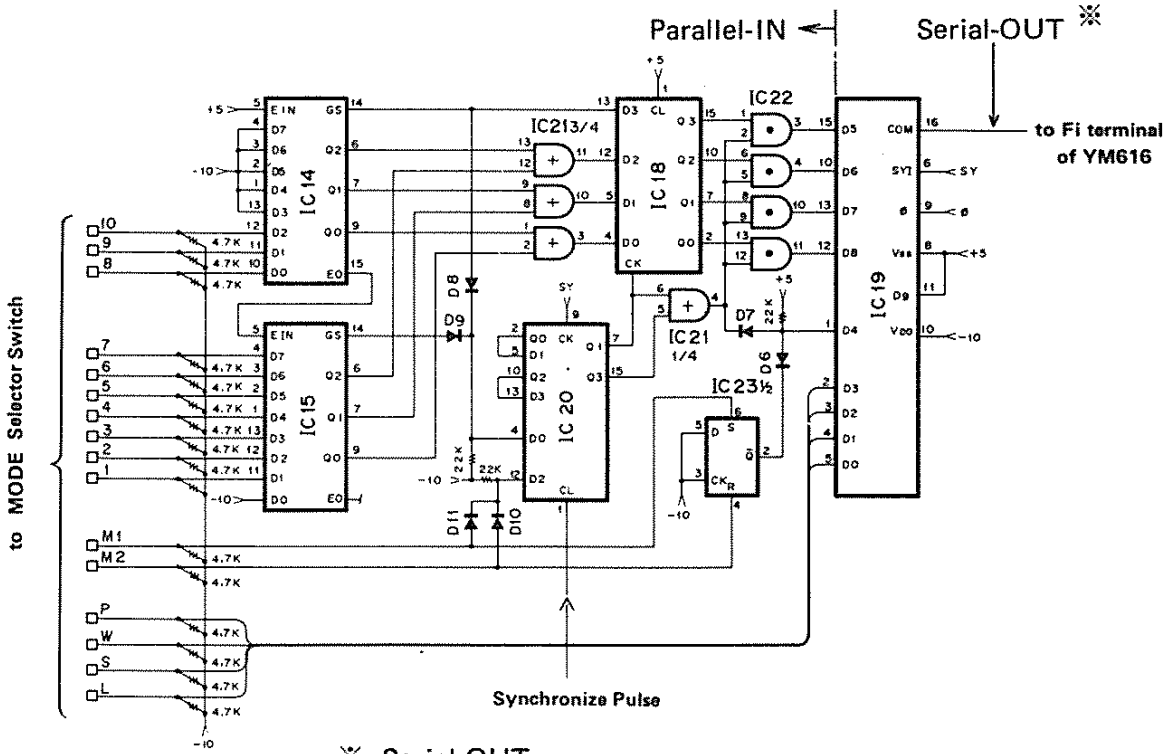

※- Serial-OUT

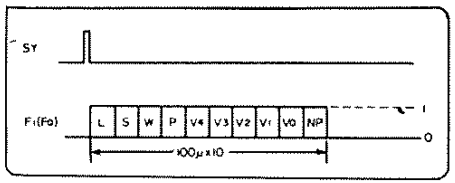

IC19 ..... YM617

iG00150

Part No.	iG00150
made by	MITSUBISHI

• FUNCTION

VCOII

• OUTLINE DRAWING

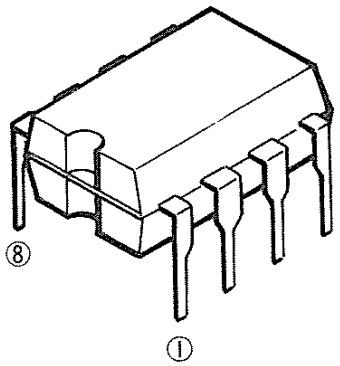

• BLOCK & SCHEMATIC DIAGRAM

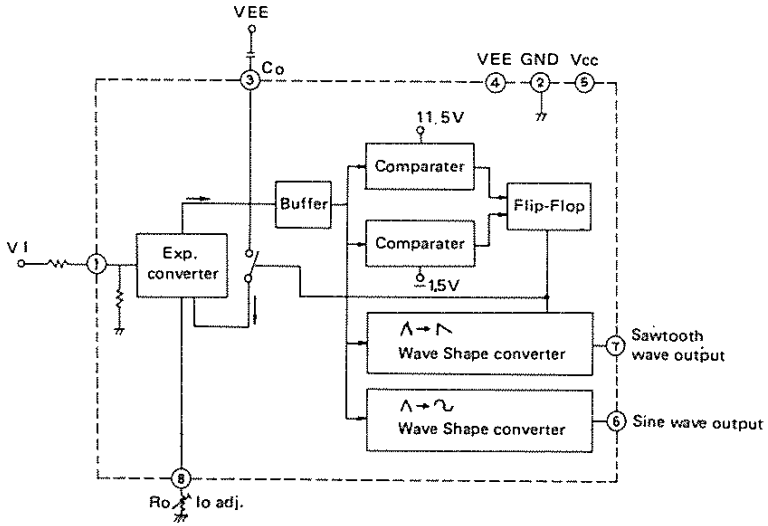

No.	Name	Description	No.	Name	Description
1	VI	Control voltage input			
2	GND	Ground			
3	Co	Capacitor for determination of the frequency			
4	VEE	−15V DC voltage supply			
5	Vcc	+15V DC voltage supply			
6	SIO	Sine wave output			
7	SO	Sawtooth wave output			
8	Io adj.	Reference current adjustment			

• CIRCUIT ILLUSTRATION

MODEL **CS-15**

CIRCUIT BOARD . . **CPA**

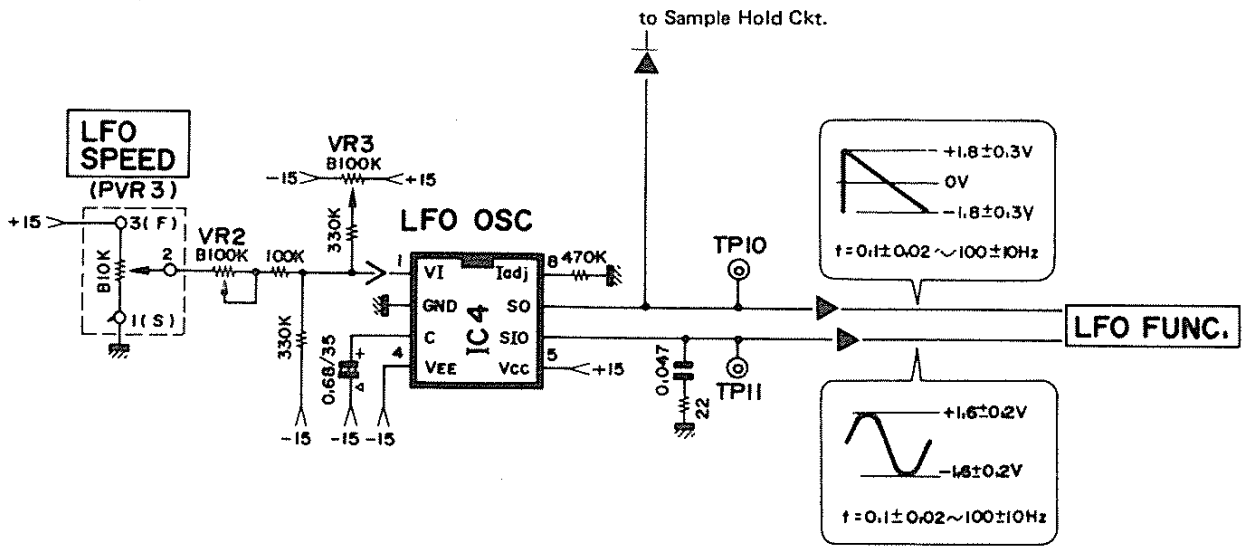

iG00151

Part No.	iG00151
made by	MITSUBISHI

• FUNCTION

Voltage Controlled Amplifier

• OUTLINE DRAWING

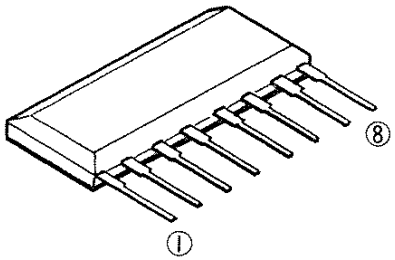

• BLOCK & SCHEMATIC DIAGRAM

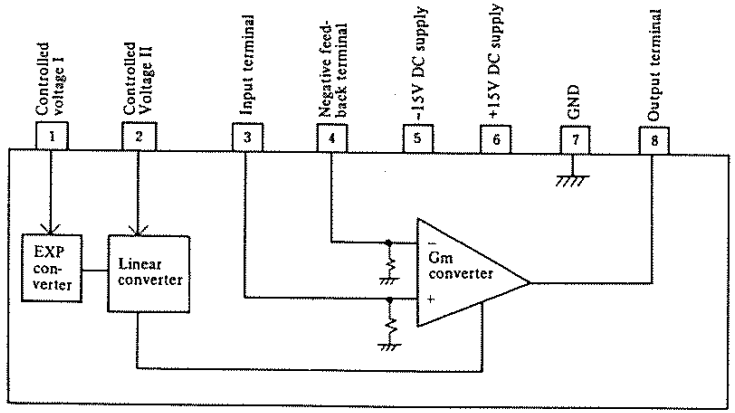

(IG00151)

No.	Name	Description	No.	Name	Description
1	EI	Control voltage 1			
2	LI	Control voltage 2			
3	IN	Input			
4	−IN	Negative Feedback			
5	VEE	−DC voltage supply			
6	Vcc	+DC voltage supply			
7	GND	Ground			
8	OUT	Output			

● CIRCUIT ILLUSTRATION

MODEL CS-5

CIRCUIT BOARD . .PN1 1/2

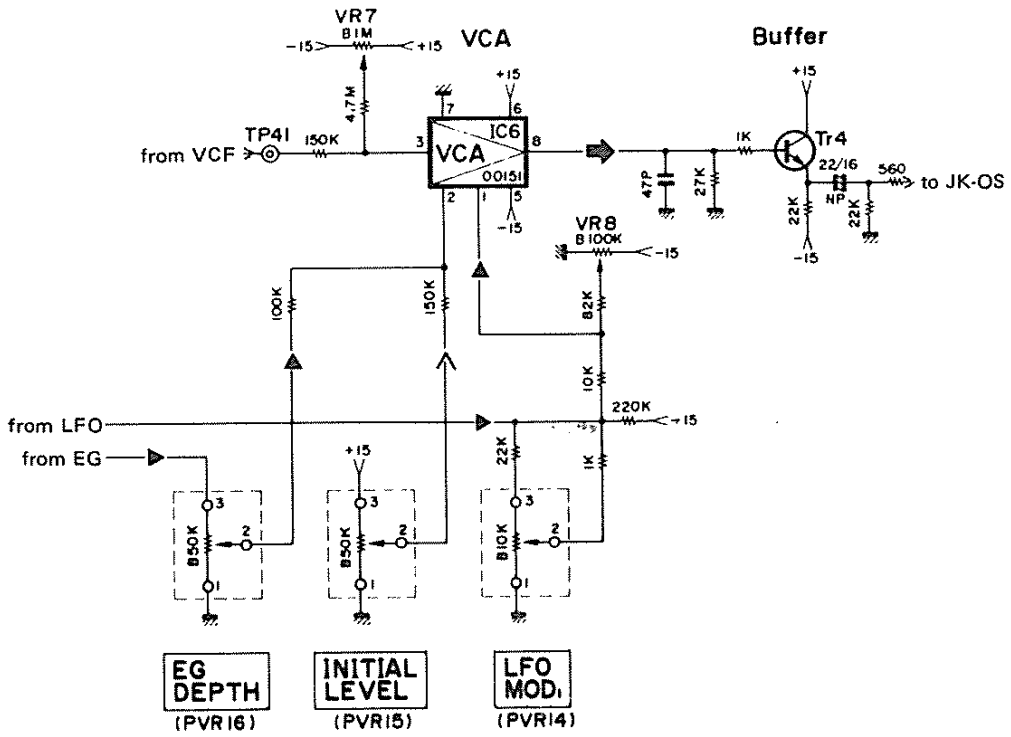

iG00152

Part No.	iG00231
made by	MITSUBISHI

• FUNCTION

Envelope Generator for VCF

• OUTLINE DRAWING

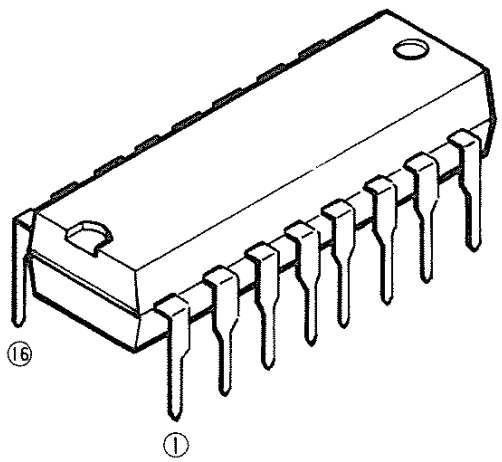

• BLOCK & SCHEMATIC DIAGRAM

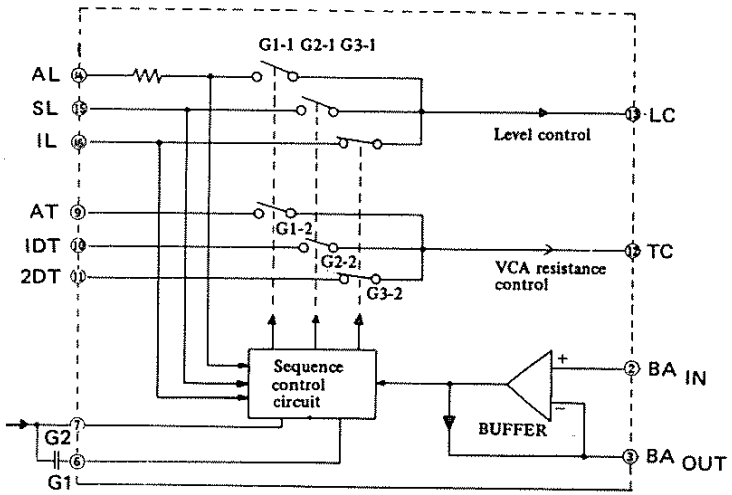

No.	Name	Description	No.	Name	Description	
1	NC	Non-connection	16	IL	Initial Level	Input
2	BAIN	Buffer amplifier input	15	SL	Sustain Level	
3	BAOUT	Buffer amplifier output	14	AL	Attack Level	
4	GND	Ground	13	LC	Level control	Output
5	Vcc	+15V DC voltage supply	12	TC	Time control	
6	G1	Gote 1	11	2DT	Release time	Input
7	G2	Gate 2	10	1DT	Decay time	
8	VEE	−15V DC voltage supply	9	AT	Attack time	

CIRCUIT ILLUSTRATION

MODEL CS-30

CIRCUIT BOARD . . SEQ

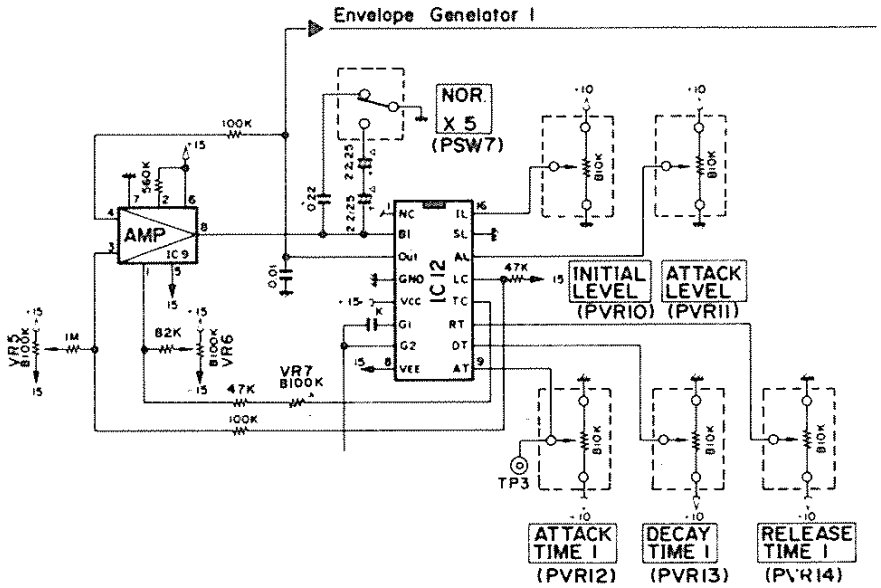

iG00153

Part No.	iG00153
made by	MITSUBISHI

• FUNCTION

VCO III

• OUTLINE DRAWING

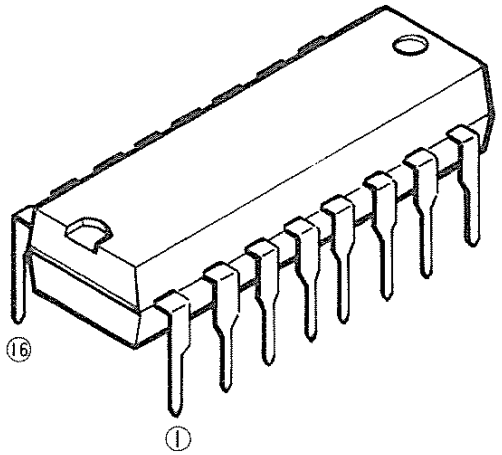

• BLOCK & SCHEMATIC DIAGRAM

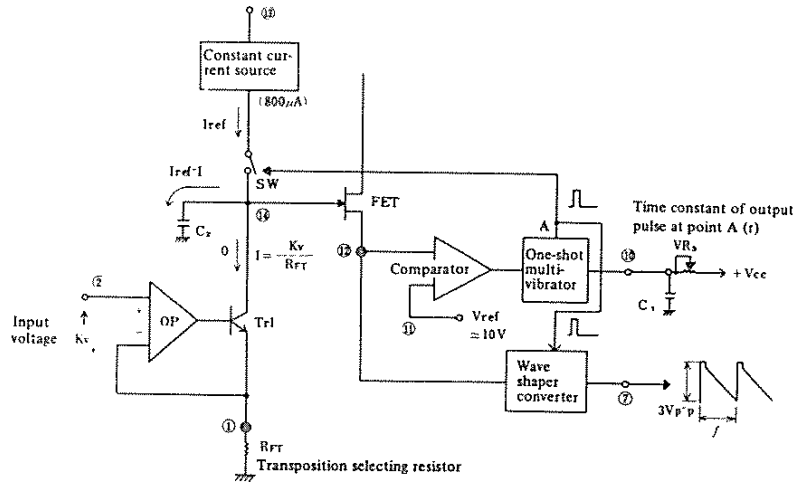

NOTE: Numbers in circle represent pin numbers of IC

No.	Name	Description	No.	Name	Description
1	FT	Feet determination	16	Vcc	+15V voltage supply
2	KV	Key voltage input	15	VIB	VIBRATO modulation signal input
3	OFF-SET	Off-set adjustment	14	TO	Output of time constant circuit
4			13	Iref	Reference current circuit
5	VEE	−15V DC voltage supply	12	TI	Input for the comparator
6	COM	Phase compensation	11	RT	Time constant circuit
7	OUT	Output	10	CT	Time constant circuit
8	GND	Ground	9	Vref	Non-connection

• CIRCUIT ILLUSTRATION

MODEL **CS-5**

CIRCUIT BOARD . . **PN1 2/2**

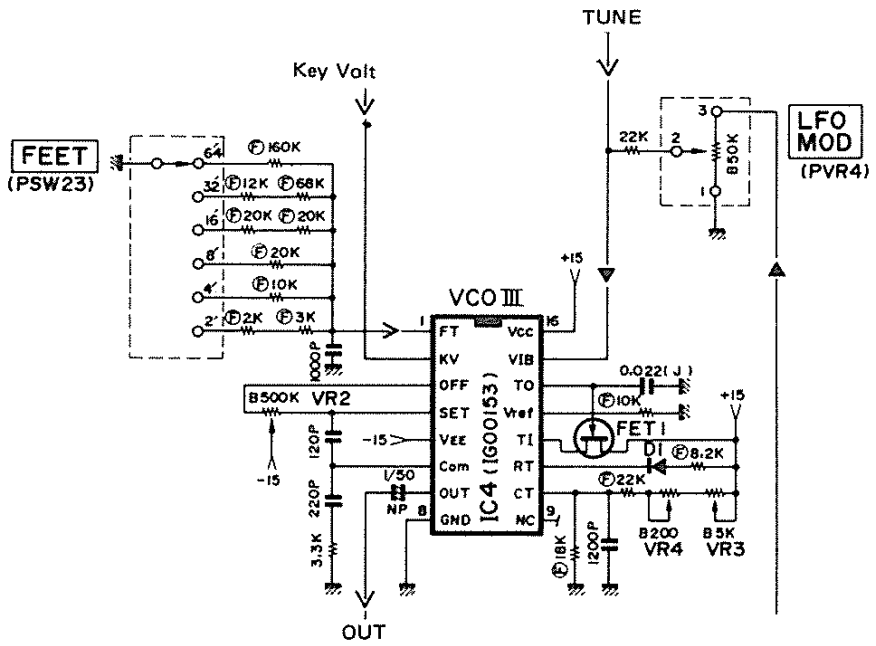

iG00156

Part No.	iG00156
made by	MITSUBISHI

• FUNCTION

(+) VCF

• OUTLINE DRAWING

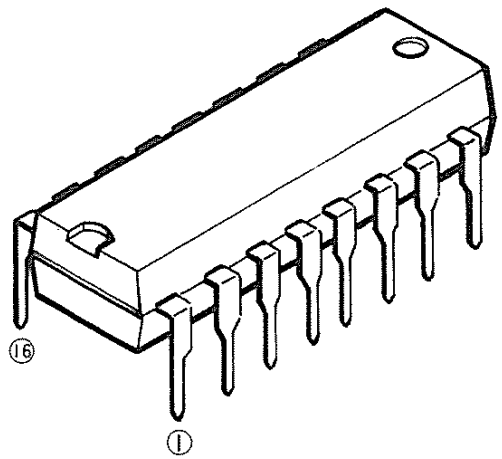

• BLOCK & SCHEMATIC DIAGRAM

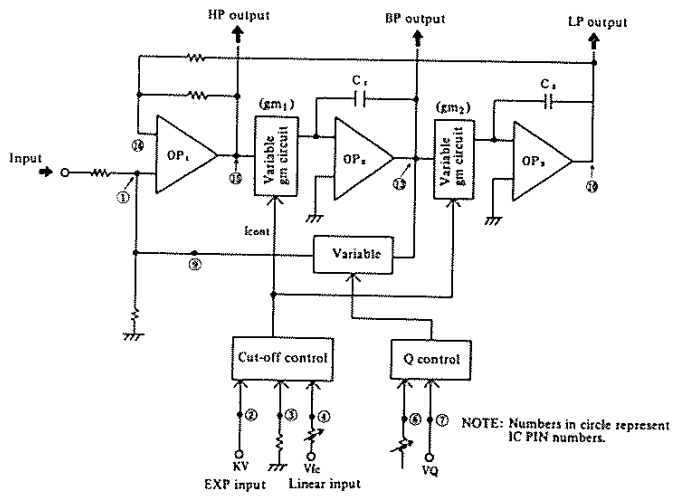

No.	Name	Description	No.	Name	Description
1	AI	Signal input	16	FBIN	Input of feed back
2	KV	Key voltage input	15	HP	Hi-pass output
3	fc	Adjustment of the cut off frequency	14	C_1	Capacitor1 (fc determination)
4	Vf	Input of the cut off voltage	13	BP	Band-pass output
5	Vcc	+15V DC voltage supply	12	VEE	−15V DC voltage supply
6	Qo	Qo adjustment	11	C_2	Capacitor2 (fc determination)
7	VQ	Voltage input of Qo control	10	LP	Low-pass output
8	GND	Ground	9	FB	Q feed back

● CIRCUIT ILLUSTRATION

MODEL CS-5

CIRCUIT BOARD . . PN1 1/2

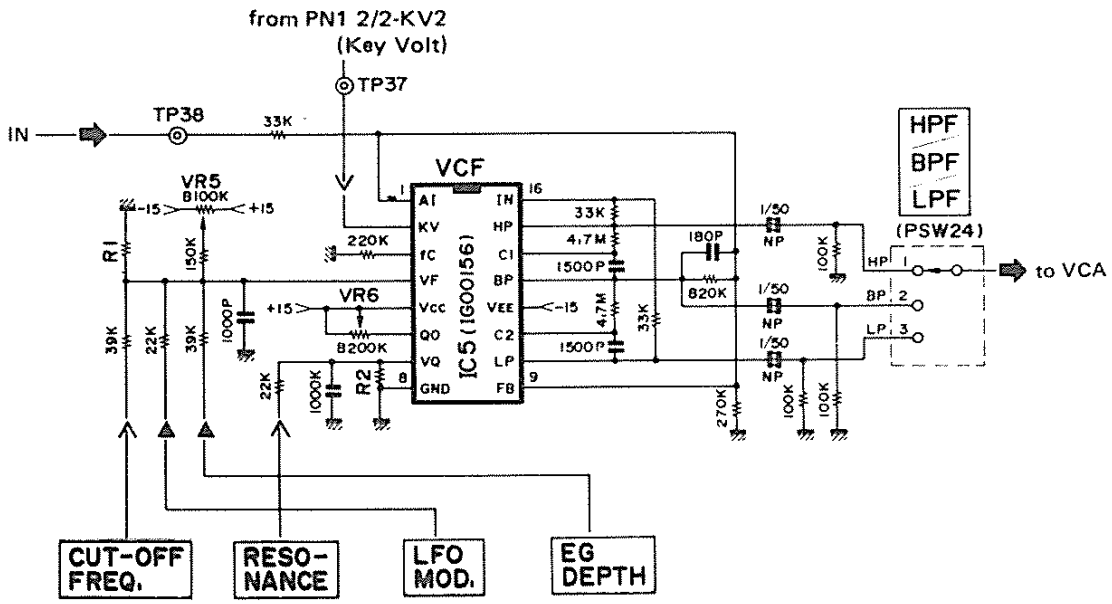

iG00158

Part No.	iG00158
made by	MITSUBISHI

● FUNCTION

W.S.C.

● OUTLINE DRAWING

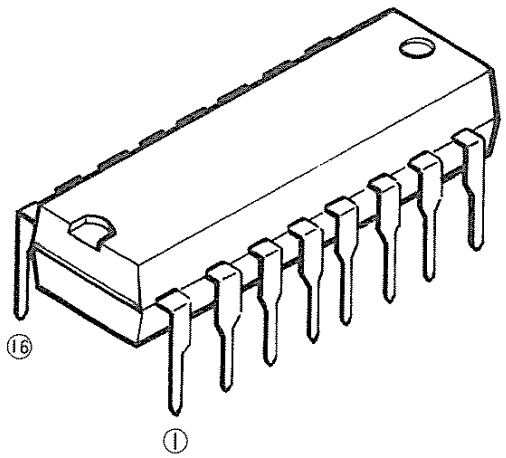

● BLOCK & SCHEMATIC DIAGRAM

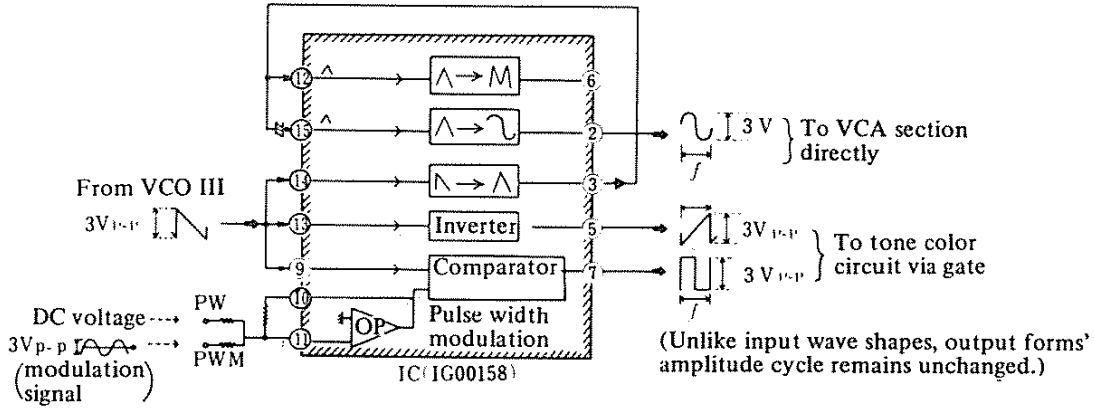

No.	Name	Description	No.	Name	Description
1	Vcc	+15V DC voltage supply	16	GND	Ground
2	SIO	Output of the sine wave	15	STI	Input of the triangle wave converter
3	TO	Output of the trianglar wave	14	TI	Input of the triangle wave converter
4	SL	Input of slice level	13	$\overline{SI}$	Input of the inverter
5	$\overline{SO}$	Output of the inverter	12	2TI	Input of the double triangul wave converter
6	2TO	Output of the double triangle wave	11	PWI	Input of OP amplifier
7	PO	Output of the pulse wave	10	PWO	Output of OP amplifier
8	VEE	−15V DC voltage supply	9	PI	Input of the pulse wave converter

• CIRCUIT ILLUSTRATION

MODEL **CS-30**

CIRCUIT BOARD . . **VCA**

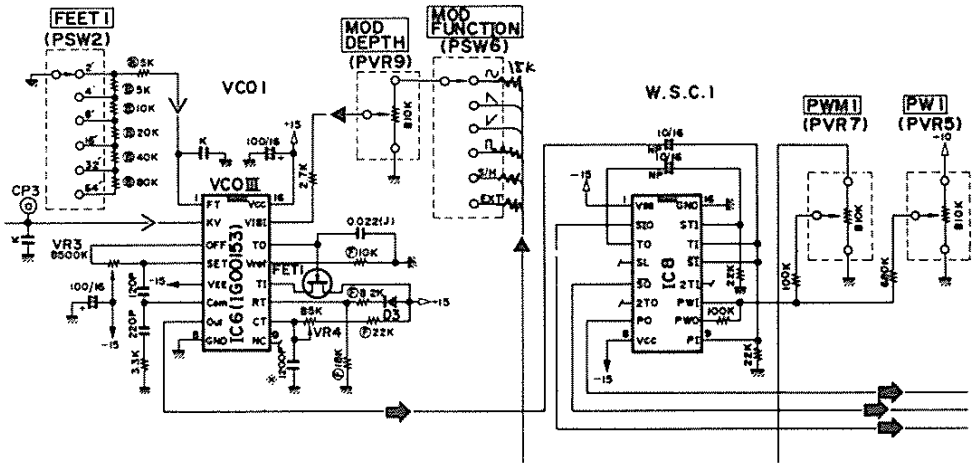

IC8 ..... iG00158

iG00159

Part No.	iG00159
made by	MITSUBISHI

• FUNCTION

Envelope Generator for VCA

• OUTLINE DRAWING

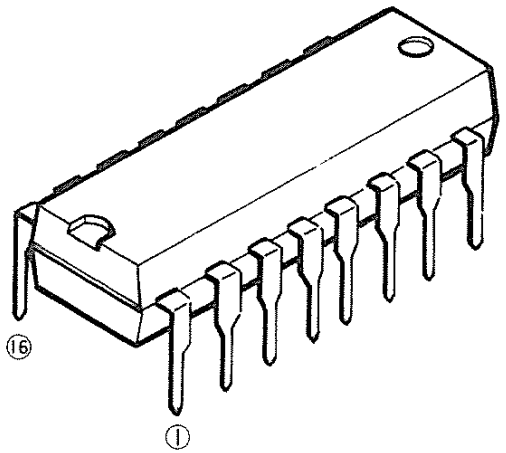

• BLOCK & SCHEMATIC DIAGRAM

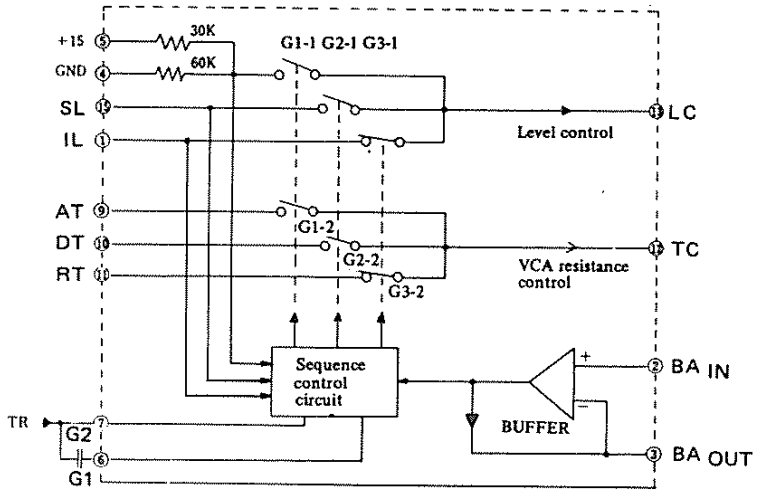

No.	Name	Description	No.	Name	Description
1	IL	Voltage input (Initial Level)	16	NC	Non-connection
2	BI	Buffer amplifier input	15	SL	Voltage input (Sustain Level)
3	BO	Buffer amplifier output	14	NC	Non-connection
4	GND	Ground	13	LC	Voltage output (Level Control)
5	Vcc	+15V DC voltage supply	12	TC	Voltage output (Time Control)
6	G1	Gate 1	11	2DT	Voltage input (Release Time)
7	G2	Gate 2	10	1DT	Voltage input (Decay Time)
8	VEE	−15V DC voltage supply	9	AT	Voltage input (Attack Time)

● CIRCUIT ILLUSTRATION

MODEL **CS-10**

CIRCUIT BOARD . . **VCA**

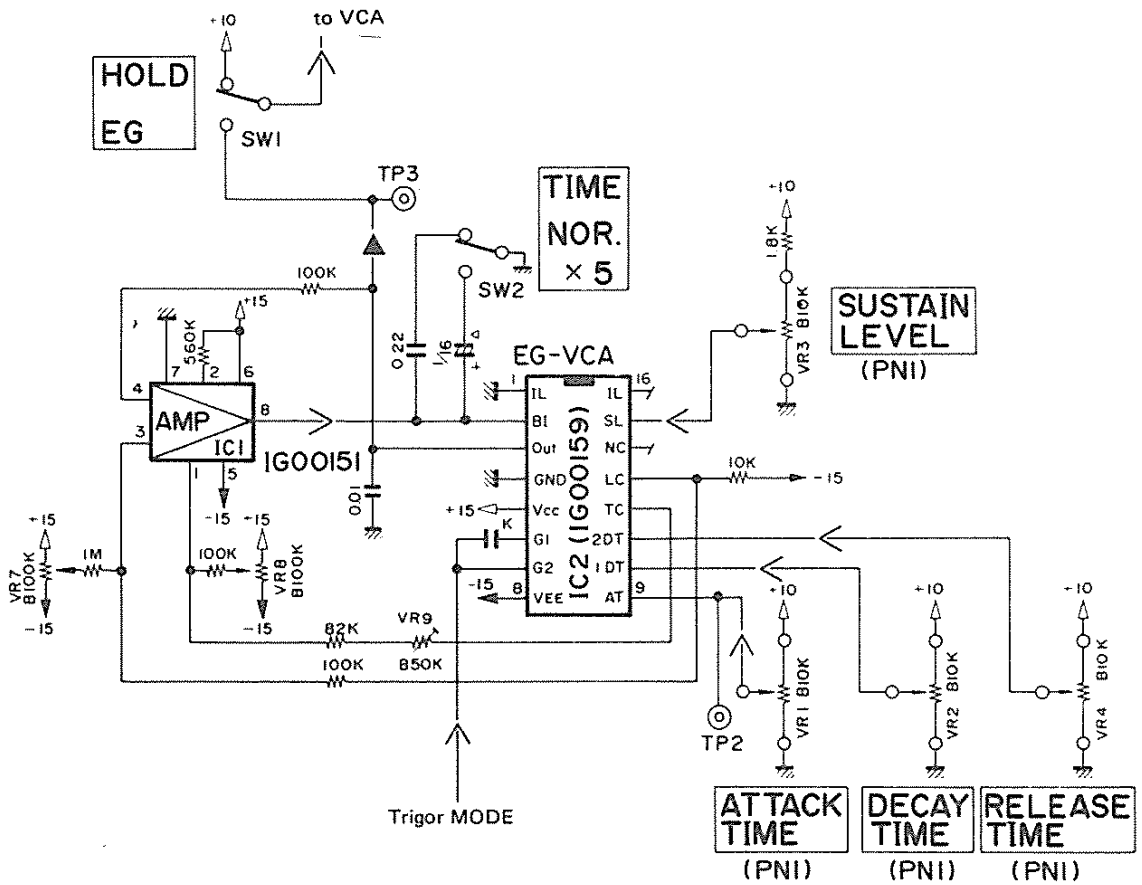

TC4006BP

Part No.	iG00168
made by	MITSUBISHI

• FUNCTION

18-Bit Shift Register

• OUTLINE DRAWING

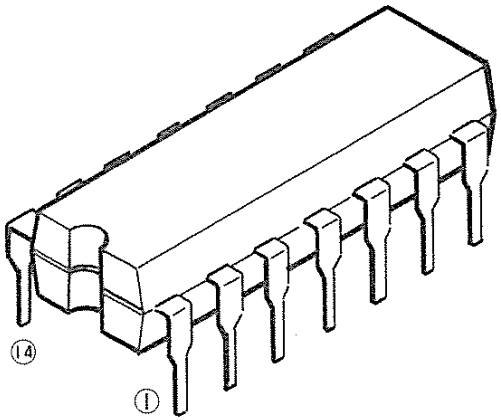

[Interchangeable parts]

CD4006B . . . . . RCA
MC14006B . . . . . MOTOROLA
F4006 . . . . . FAIRCHILD

• BLOCK & SCHEMATIC DIAGRAM

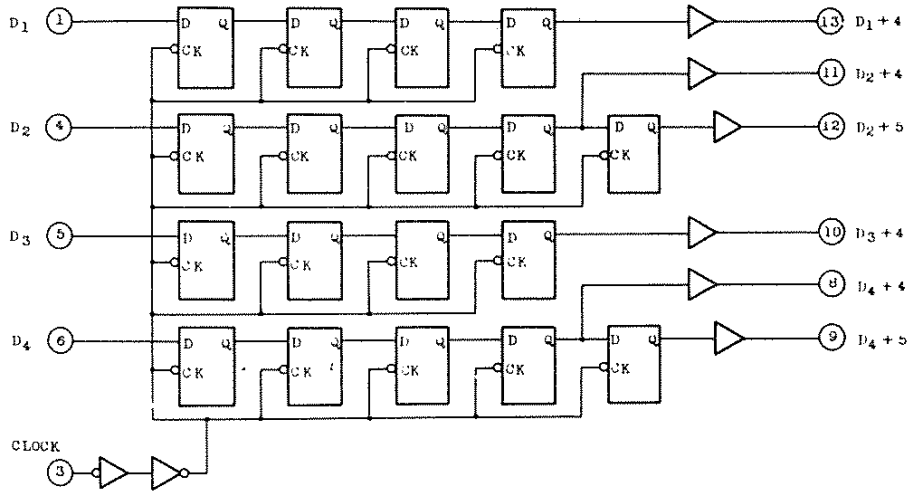

No.	Name	Description	No.	Name	Description
1	D_1	Date input	14	V_{DD}	+DC voltage supply
2	NC	Nonconnection	13	D_1+4	Data output
3	CK	CLOCK input	12	D_2+5	Data output
4	D_2	Data input	11	D_2+4	Data output
5	D_3	Data input	10	D_3+4	Data output
6	D_4	Data input	9	D_4+5	Data output
7	V_{SS}	−DC voltage supply	8	D_4+4	Data output

● CIRCUIT ILLUSTRATION

MODEL **CS-60**

CIRCUIT BOARD . . **KBC**

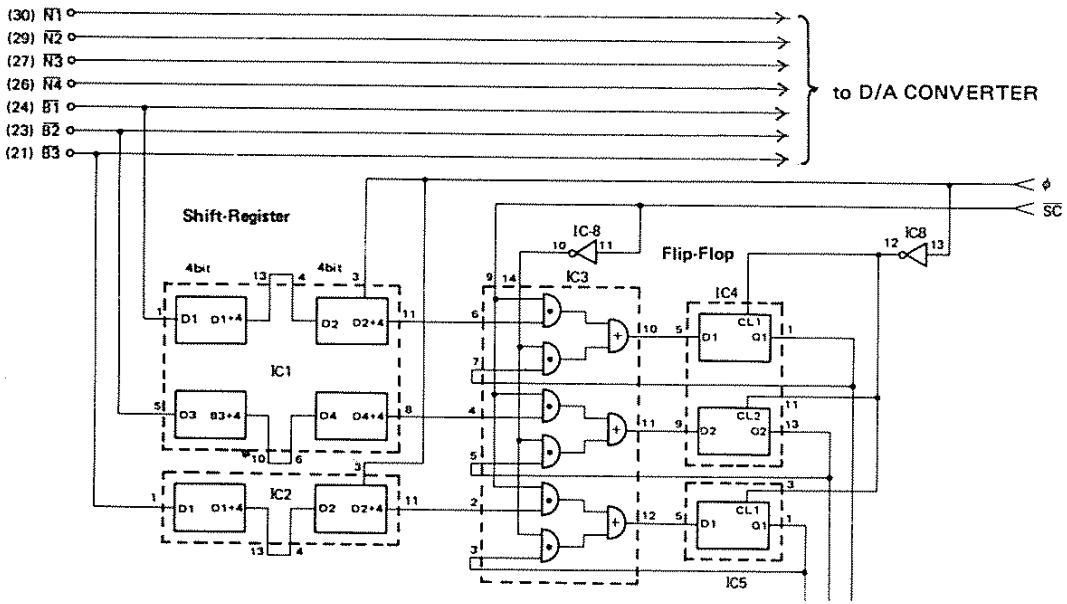

IC1 & 2 ..... TC4006BP

TC4007UBP

Part No.	iG00178
made by	TOSHIBA

● FUNCTION
Dual Complementary Pair Plus Inverter

● OUTLINE DRAWING

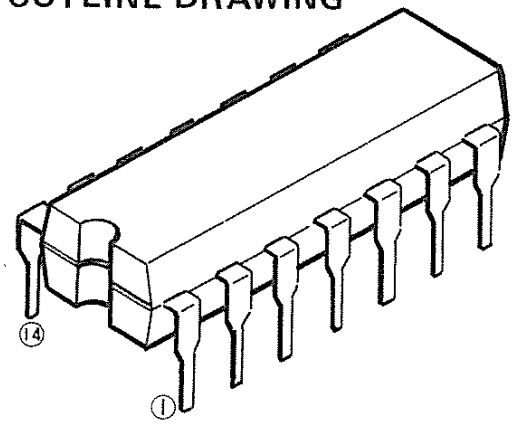

[Interchangeable parts]
CD4007UB . . . . . RCA
MC14007B . . . . . MOTOROLA
F4007 . . . . . FAIRCHILD

● BLOCK & SCHEMATIC DIAGRAM

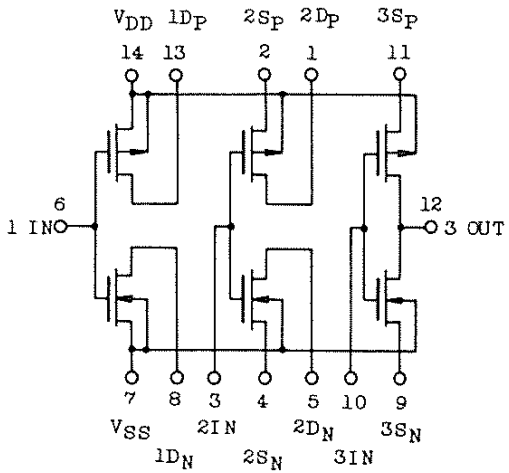

● Application
Analog Data Selector

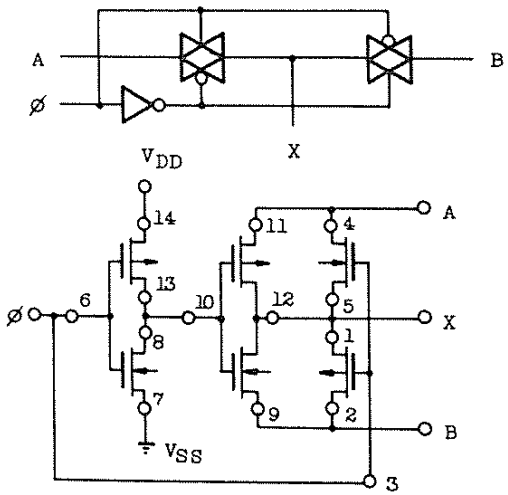

No.	Name	Description	No.	Name	Description
1	2DP	Drain 2 (P-ch)	14	VDD	+DC voltage supply
2	2SP	Source 2 (P-ch)	13	1DP	Drain 1 (P-ch)
3	2IN	Input 2	12	3OUT	Output 3
4	2SN	Source 2 (N-ch)	11	3SP	Source 3 (P-ch)
5	2DN	Drain 2 (N-ch)	10	3IN	Input 3
6	1IN	Input 1	9	3SN	Source 3 (N-ch)
7	VSS	—DC voltage supply	8	1DN	Drain 1 (N-ch)

• CIRCUIT ILLUSTRATION

MODEL **CS15D**

CIRCUIT BOARD .. **VCF**

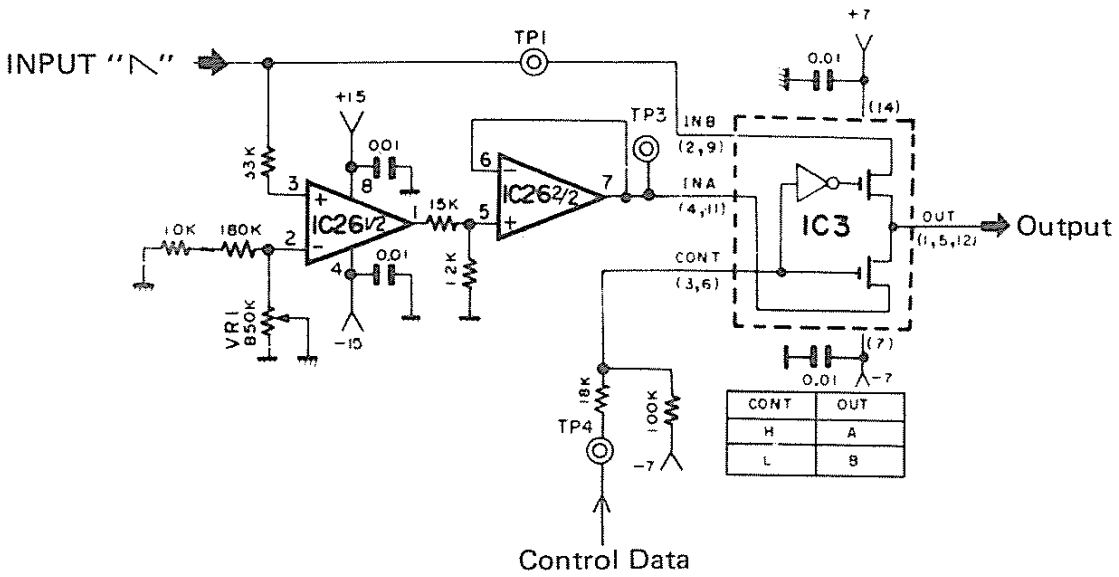

CONT	OUT
H	A
L	B

IC3 ..... TC4007UBP

TC4011BP

Part No.	iG00124
made by	TOSHIBA

• FUNCTION

Quad 2-input Positive NAND

• OUTLINE DRAWING

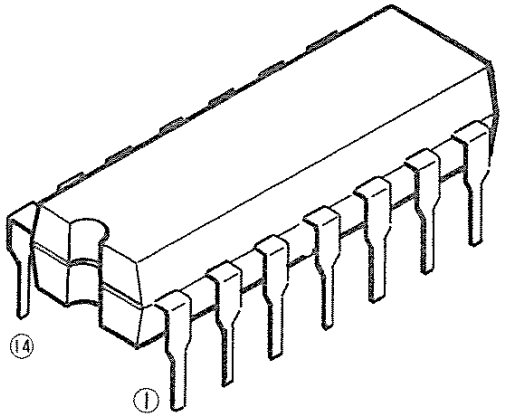

[Interchangeable parts]

CD4011B . . . . . RCA
HC14011B . . . . . MOTOROLA
F4011 . . . . . FAIRCHILD

• BLOCK & SCHEMATIC DIAGRAM

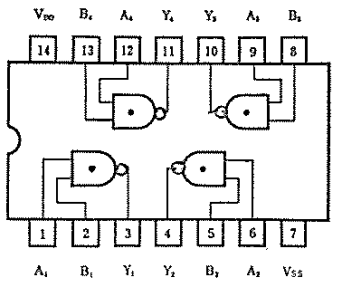

Truth Table

A	B	Y
L	L	H
H	L	H
L	H	H
H	H	L

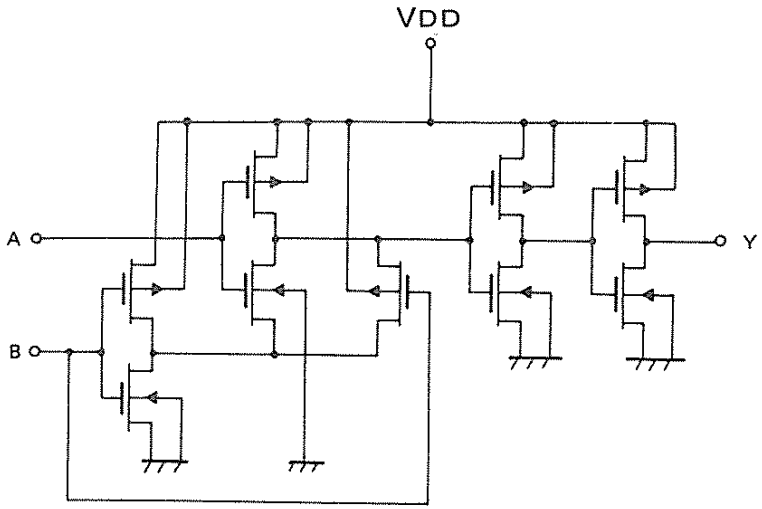

No.	Name	Description	No.	Name	Description
1	A_1	Input	14	VDD	+DC voltage supply
2	B_1		13	A_4	Input
3	Y_1	Output	12	B_4	
4	Y_2	Output	11	Y_4	Output
5	A_2	Input	10	Y_3	Output
6	B_2		9	A_3	Input
7	Vss	−DC voltage supply	8	B_3	

• CIRCUIT ILLUSTRATION

MODEL **CS-30**

CIRCUIT BOARD .. **SEQ**

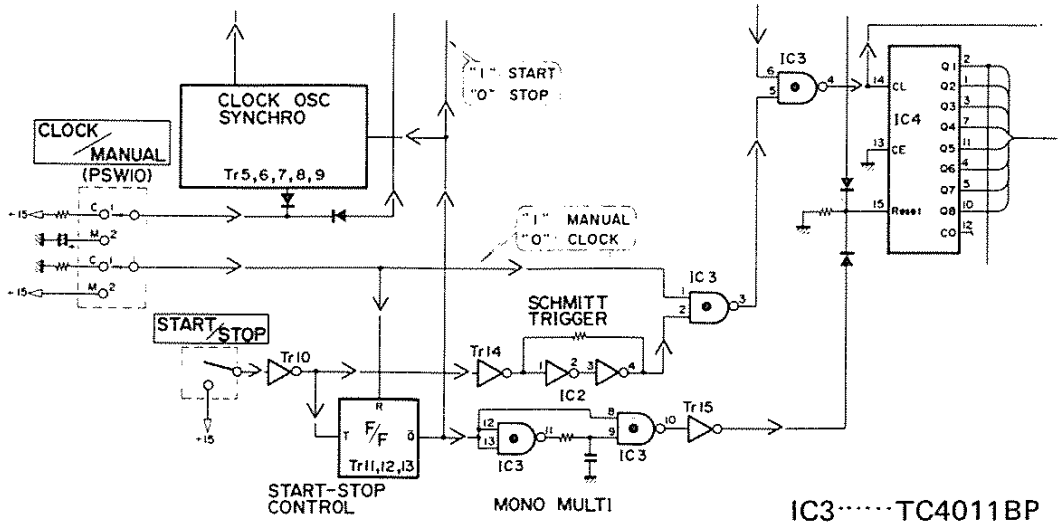

TC4013BP

Part No.	iG00118
made by	TOSHIBA

• FUNCTION

Dual D-Type Flip-Flop

• OUTLINE DRAWING

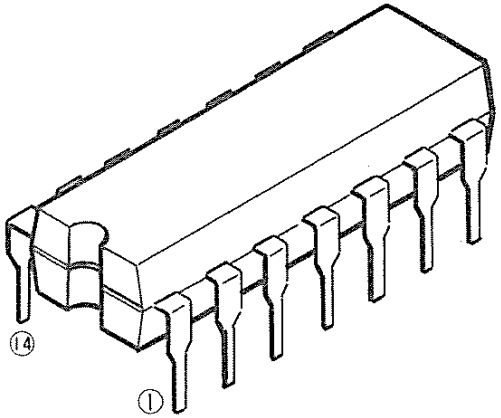

[Interchangeable parts]

CD4013B . . . . . RCA
MC14013B . . . . . MOTOROLA
F4013 . . . . . FAIRCHILD

• BLOCK & SCHEMATIC DIAGRAM

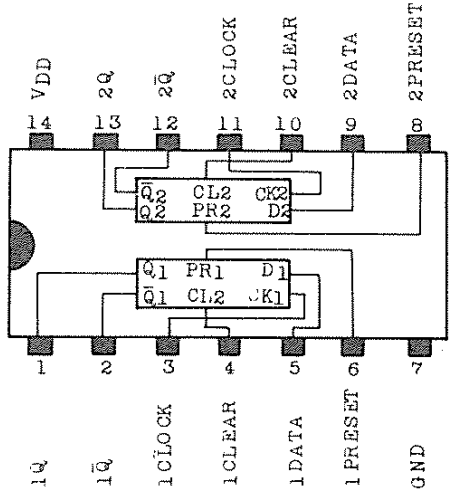

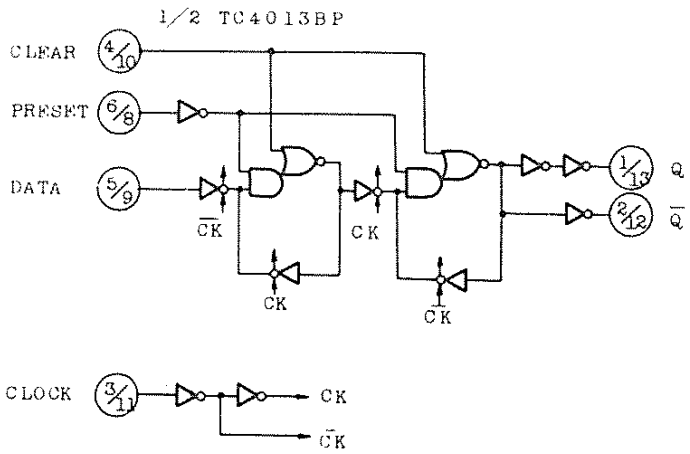

No.	Name	Description	No.	Name	Description
1	1Q	Output	14	VDD	+DC voltage supply
2	1Q̄	Inverted output	13	2Q	Output
3	1CK	Clock input	12	2Q̄	Inverted output
4	1CL	Clear input	11	2CK	Clock input
5	1D	Date input	10	2CL	Clear input
6	1PR	Preset input	9	2D	Date input
7	Vss	−DC voltage supply	8	2PR	Preset input

CIRCUIT ILLUSTRATION

MODEL **CS-60**

CIRCUIT BOARD .. **KBC**

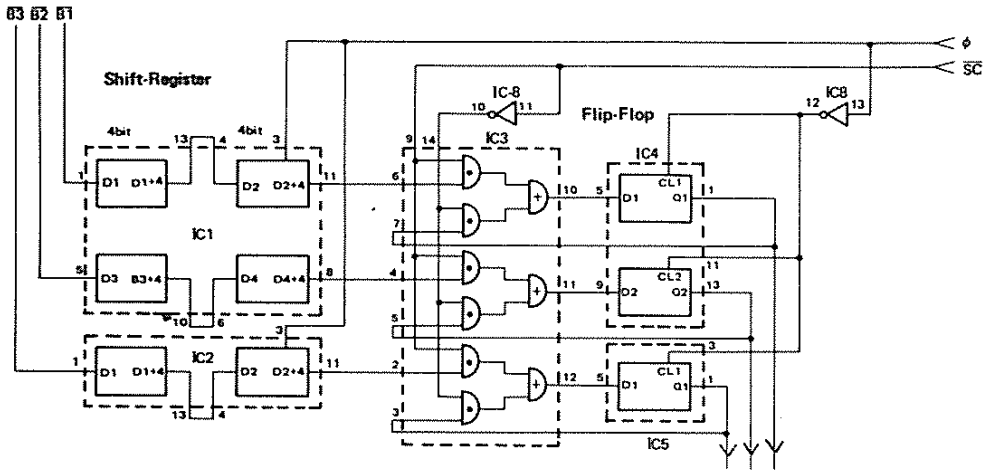

IC4 & 5 ..... TC4013BP

TC4016BP

Part No.	iG00169
made by	TOSHIBA

• FUNCTION

Quad Bilateral Switch

• OUTLINE DRAWING

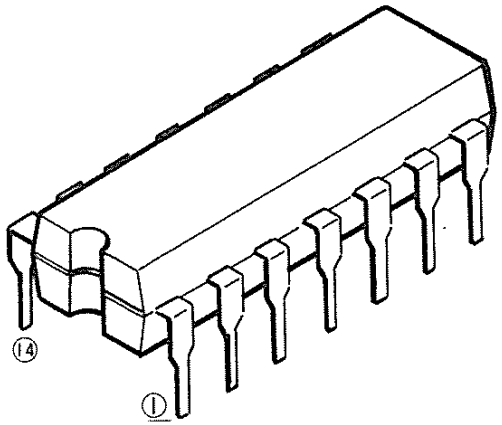

[Interchangeable parts]

CD4016B . . . . . RCA
MC14016B . . . . . .MOTOROLA
F4016 . . . . . .FAIRCHILD

• BLOCK & SCHEMATIC DIAGRAM

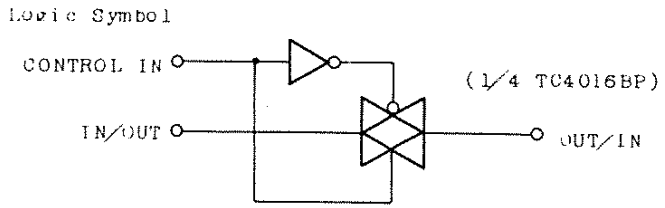

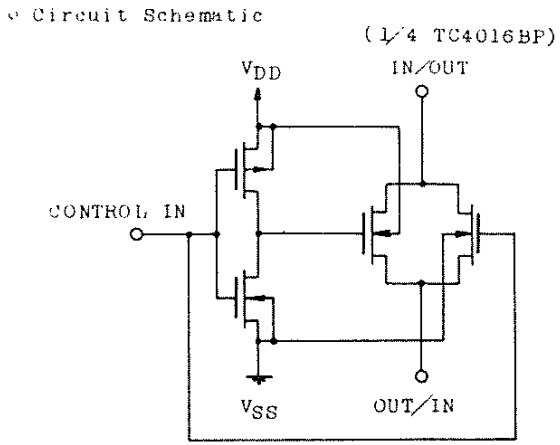

No.	Name	Description	No.	Name	Description
1	1 IN	Input	14	VDD	+DC voltage supply
2	1 OUT	Output	13	1 CIN	Control IN
3	2 OUT	Output	12	4 CIN	Control IN
4	2 IN	Input	11	4 IN	Input
5	2 CIN	Control IN	10	4 OUT	Output
6	3 CIN	Control IN	9	3 OUT	Output
7	Vss	—DC voltage supply	8	3 IN	Input

• CIRCUIT ILLUSTRATION

MODEL CS-30

CIRCUIT BOARD .. SEQ

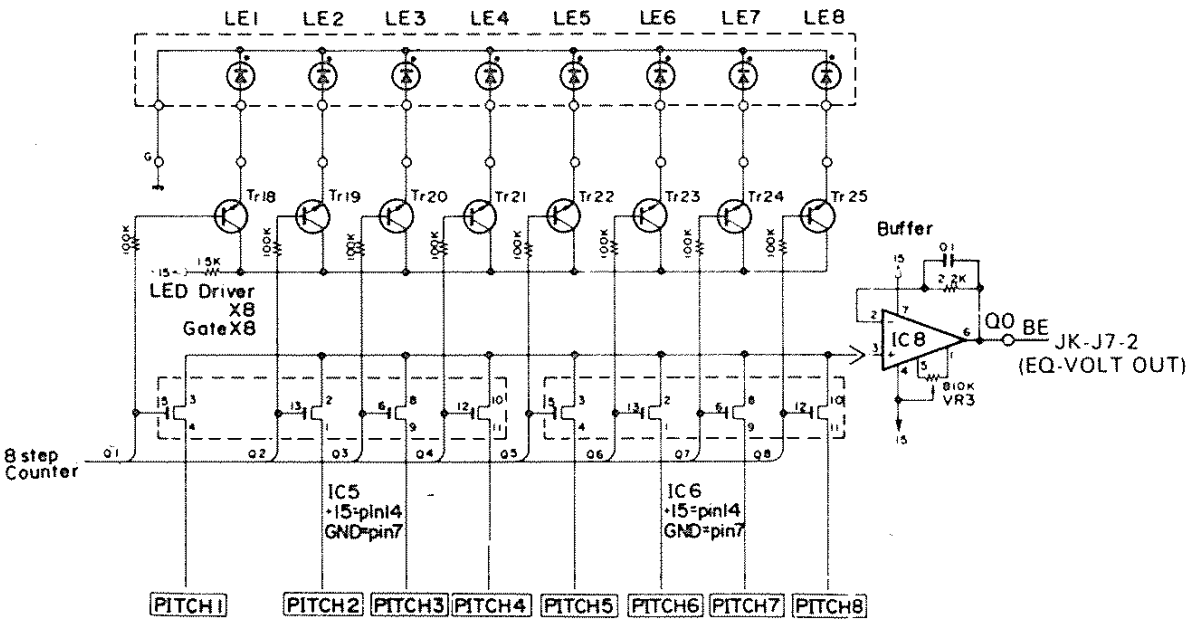

IC5 & 6 ..... TC4016BP

TC4017BP

Part No.	iG02570
made by	TOSHIBA

● FUNCTION

DECADE COUNTER/DIVIDER

● OUTLINE DRAWING

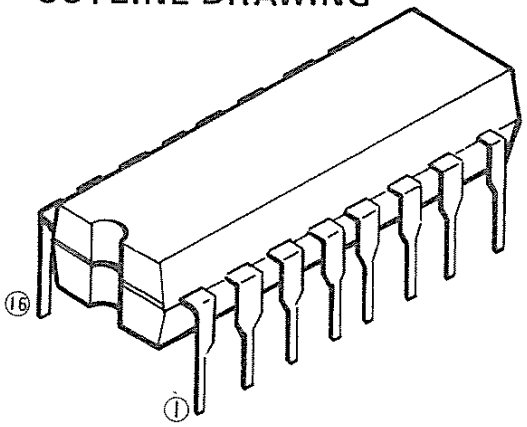

[Interchangeable parts]

CD4017B . . . . . RCA
MC14017B . . . . . MOTOROLA
F4017 . . . . . FAIRCHILD

● BLOCK & SCHEMATIC DIAGRAM

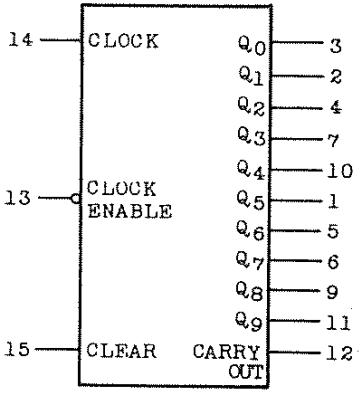

V_{DD} ; 16, V_{SS} ; 8

Note) VDD – VSS = 15V

Timing Chart

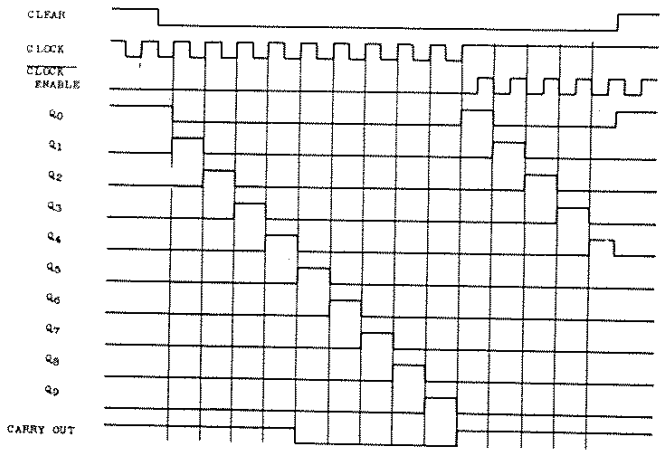

No.	Name	Description	No.	Name	Description
1	Q_5	Decoded output 5	16	VDD	+DC voltage supply
2	Q_1	" 1	15	CL	CLEAR Input
3	Q_0	" 0	14	CK	CLOCK Input
4	Q_2	" 2	13	CE	CLOCK ENABLE Input
5	Q_6	" 6	12	CO	CARRY OUT
6	Q_7	" 7	11	Q_9	Decoded output 9
7	Q_3	" 3	10	Q_4	" 4
8	V SS	–DC voltage supply	9	Q_8	" 8

• CIRCUIT ILLUSTRATION

MODEL **CS-40M**

CIRCUIT BOARD .. **PA**

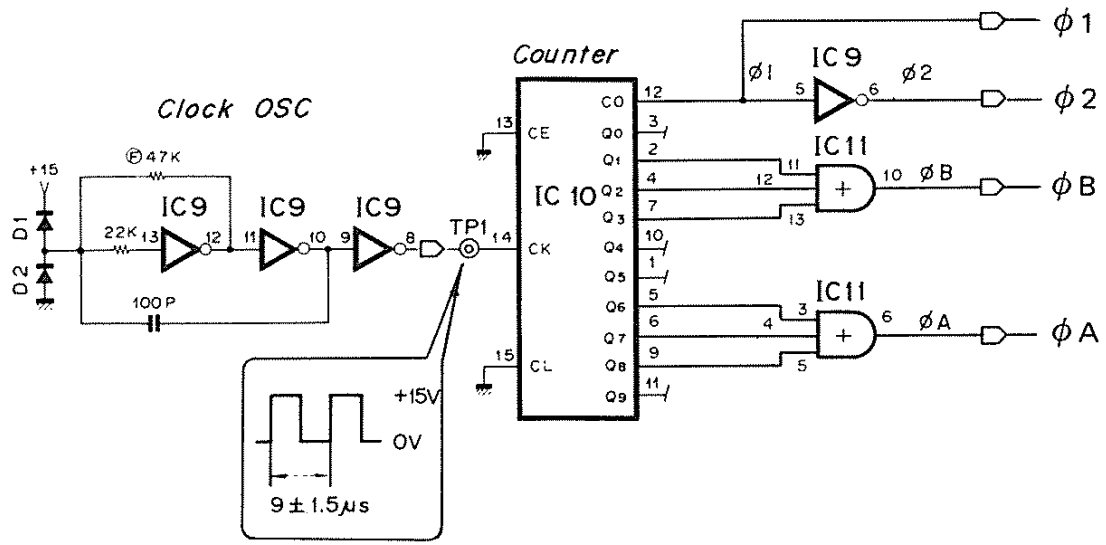

The IC10 is a decimal system counter.
At the "H" level, the gate will be switched on.

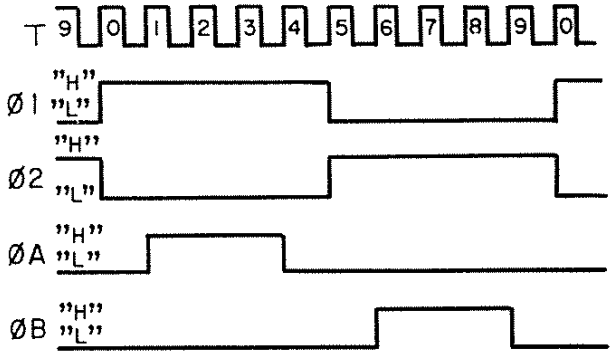

IC10 ..... TC4017BP

TC40175BP

Part No.	iG03580
made by	TOSHIBA

• FUNCTION

Quad D type Flip Flop

• OUTLINE DRAWING

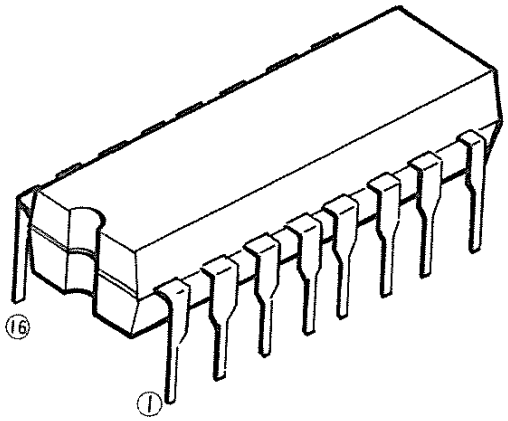

[Interchangeable parts]
MC14175B . . . . . MOTOROLA

• BLOCK & SCHEMATIC DIAGRAM

LOGIC DIAGRAM

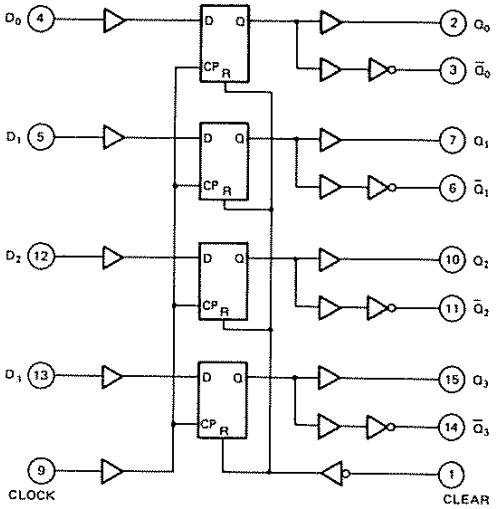

TRUTH TABLE

INPUTS			OUTPUTS	
CLOCK△	D_n	$\overline{CLEAR}$	Q_n	$\overline{Q_n}$
↑	H	H	H	L
↑	L	H	L	H
↓	※	H	Q_n •	$\overline{Q_n}$ •
※	※	L	L	H

△ ; Level change
• ; No change
※ ; Don't care

No.	Name	Description	No.	Name	Description
1	$\overline{CL}$	Clear input	16	V SS	+DC voltage supply
2	Q_0	Output 0	15	Q_3	Output 3
3	$\overline{Q_0}$	Inverted output 0	14	$\overline{Q_3}$	Inverted output 3
4	D_0	Input 0	13	D_3	Input 3
5	D_1	Input 1	12	D_2	Input 2
6	Q_1	Inverted output 1	11	$\overline{Q_2}$	Inverted output 2
7	Q_1	Output 1	10	Q_2	Output 2
8	V SS	−DC voltage supply	9	CK	Clock input

• CIRCUIT ILLUSTRATION

MODEL **CS-40M**

CIRCUIT BOARD . . **PGM**

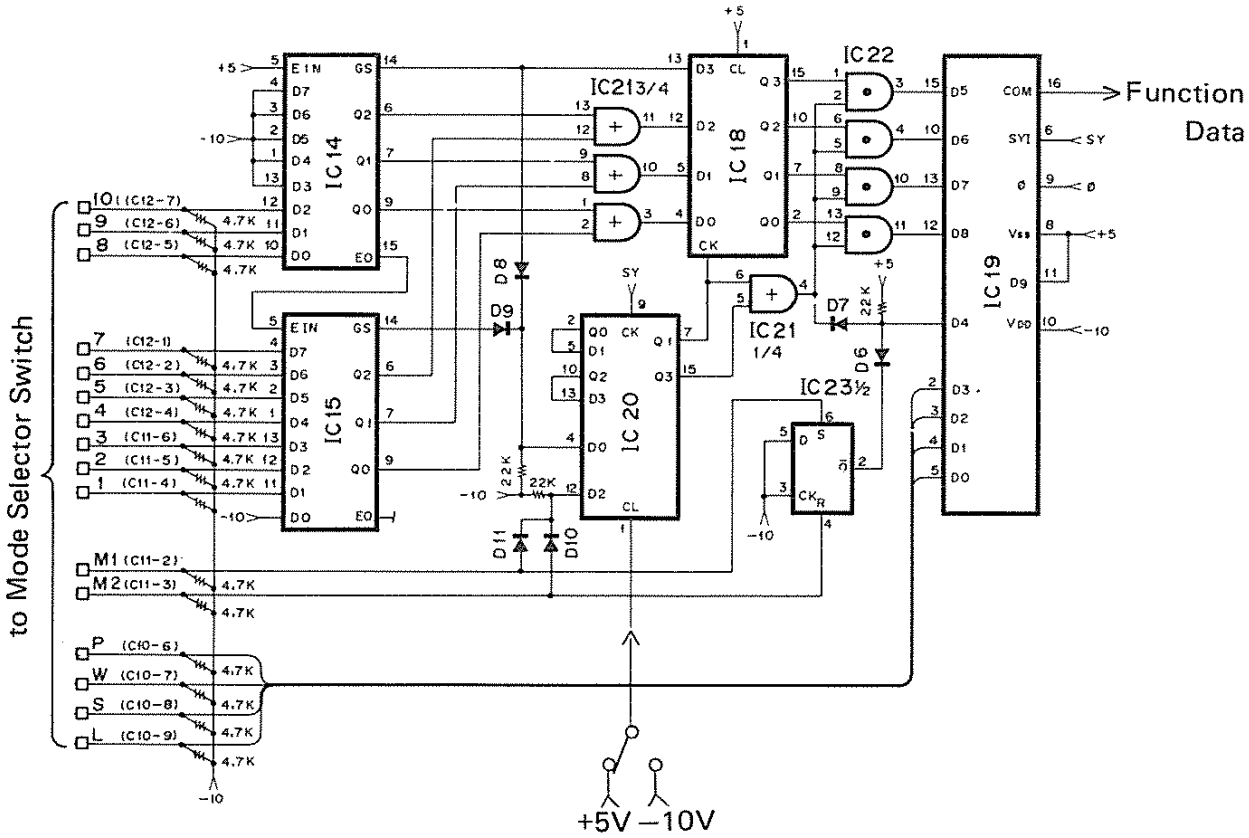

※ TC40175BP is a quad type D flip flop with common clock and clear terminal.

IC18, 20 ..... TC40175BP

TC4019BP

Part No.	iG00170
made by	TOSHIBA

• FUNCTION

AND-OR select Gate

• OUTLINE DRAWING

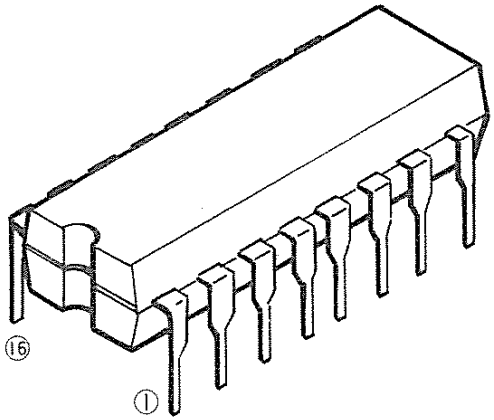

[Interchangeable parts]

CD4019BP . . . . . RCA
F4019 . . . . . F·C
TP4019A . . . . . TI

• BLOCK & SCHEMATIC DIAGRAM

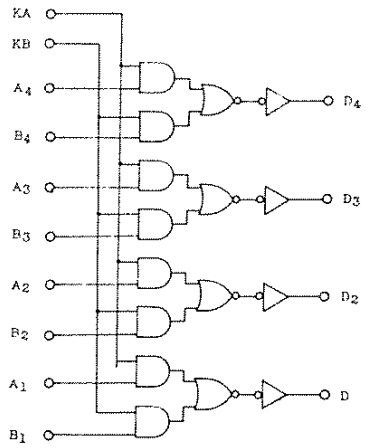

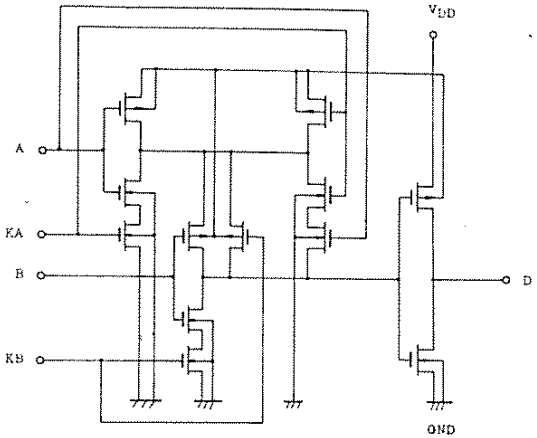

¼ TC4019BP

TRUTH TABLE

入力				出力
A	KA	B	KB	D
L	L	L	L	L
L	L	L	H	L
L	L	H	L	L
L	L	H	H	H
L	H	L	L	L
L	H	L	H	L
L	H	H	L	L
L	H	H	H	H
H	L	L	L	L
H	L	L	H	L
H	L	H	L	L
H	L	H	H	H
H	H	L	L	H
H	H	L	H	H
H	H	H	L	H
H	H	H	H	H

D=A·KA+B·KB

No.	Name	Description	No.	Name	Description
1	B_4	Input	16	VDD	+DC voltage supply
2	A3		15	A_4	Input
3	B_3		14	KB	Input
4	A_2		13	D_4	Output D=A·KA+B·KB
5	B_2		12	D_3	
6	A_1		11	D_2	
7	B_1		10	D_1	
8	Vss	—DC voltage supply	9	KA	Input

● CIRCUIT ILLUSTRATION

MODEL **CS-80**

CIRCUIT BOARD .. **TKC**

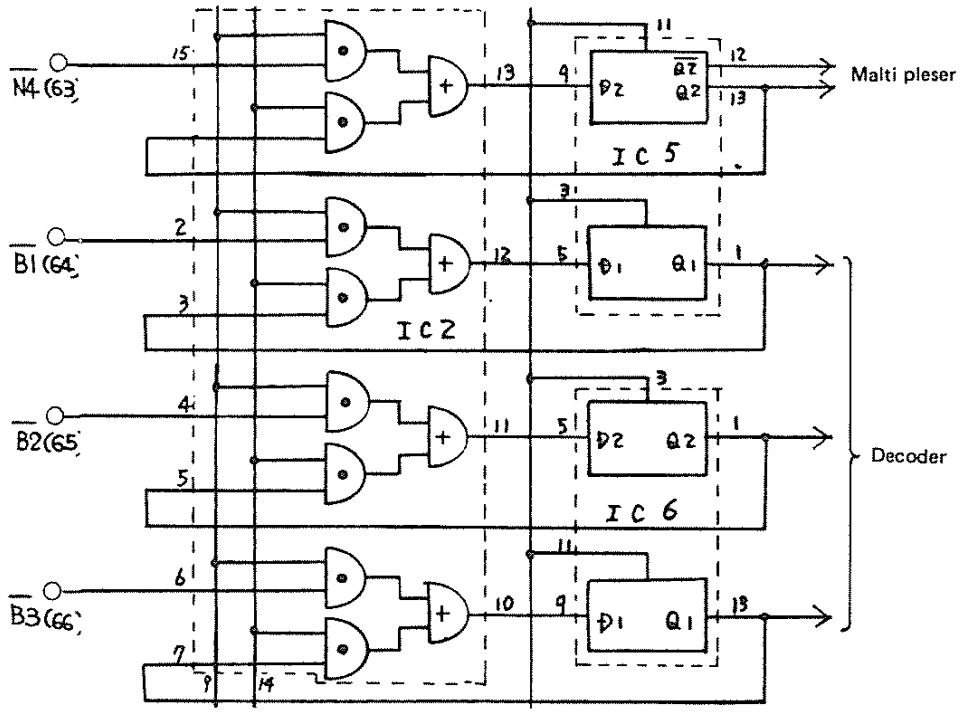

IC2 ..... TC4019BP

TC4022BP

Part No.	iG02750
made by	TOSHIBA

• FUNCTION

OCTAL COUNTER/DIVIDER

• OUTLINE DRAWING

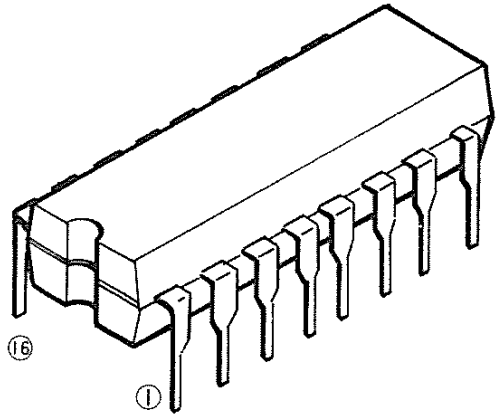

[Interchangeable parts]

CD4022B . . . . . RCA
MC14022B . . . . . MOTOROLA
F4022 . . . . . FAIRCHILD

• BLOCK & SCHEMATIC DIAGRAM

LOGIC DIAGRAM

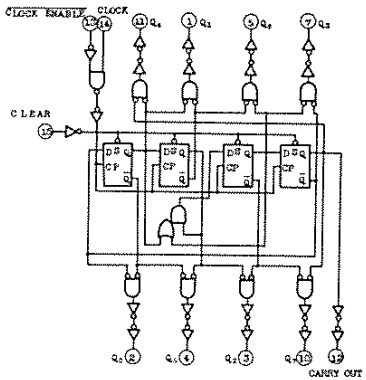

Timing chart

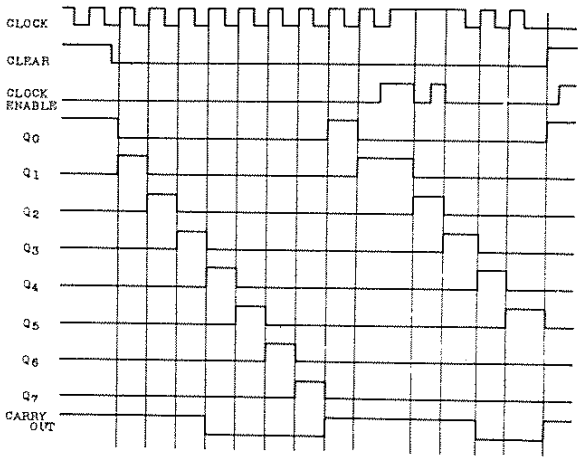

No.	Name	Description	No.	Name	Description
1	Q1	Decoded output 1	16	VDD	+DC voltage supply
2	Q_0	" 0	15	CL	Clear input
3	Q_2	" 2	14	CK	Clock input
4	Q_5	" 5	13	CE	Clock Enable
5	Q_6	" 6	12	CO	Carry Out
6	NC	Non-connection	11	Q_4	Decoded output 4
7	Q_3	Decoded output 3	10	Q_7	" 7
8	Vss	—DC voltage supply	9	NC	Non-connection

● CIRCUIT ILLUSTRATION

MODEL **CS-30**

CIRCUIT BOARD . . **SEQ**

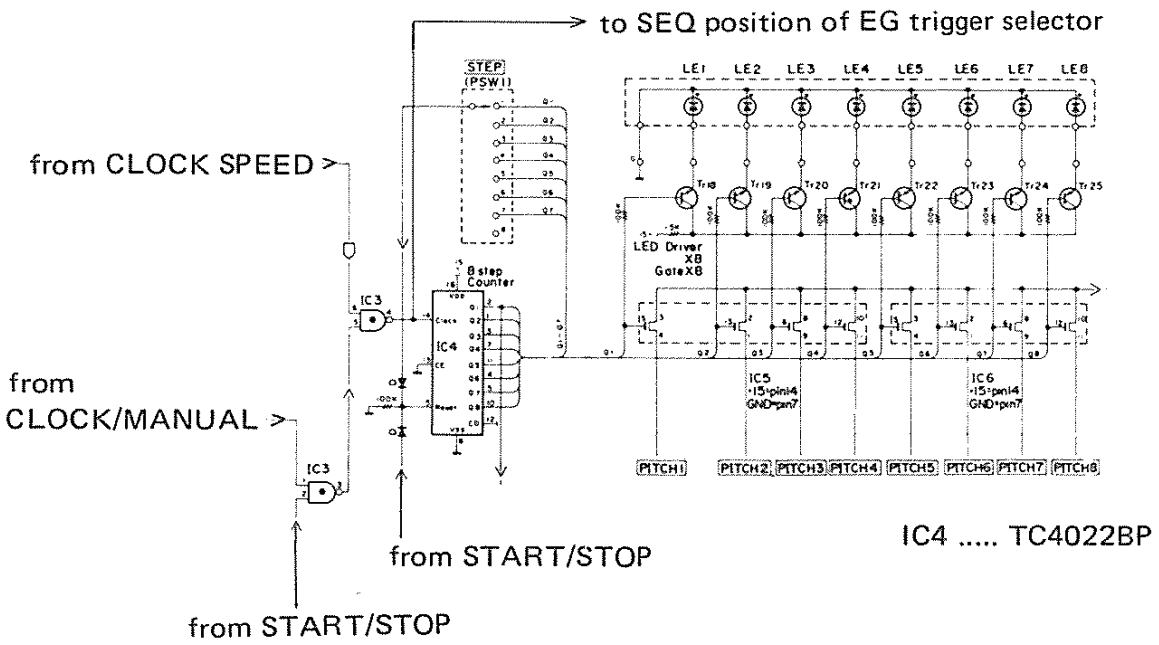

IC4 ..... TC4022BP

TC4027BP

Part No.	iG00125
made by	TOSHIBA

• FUNCTION

Dual J-K Master-Slave Flip-Flop

• OUTLINE DRAWING

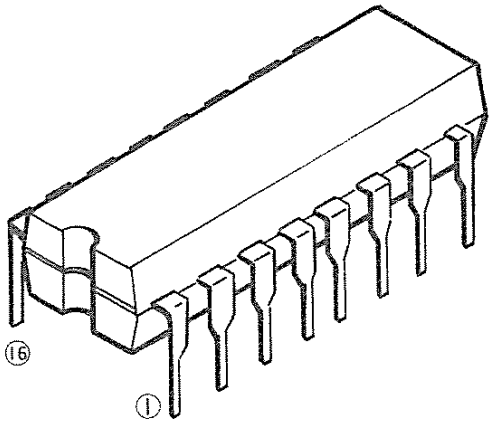

[Interchangeable parts]

CD4027B . . . . . RCA
MC14027B . . . . . MOTOROLA
F4027 . . . . . FAIRCHILD

• BLOCK & SCHEMATIC DIAGRAM

LOGIC DIAGRAM

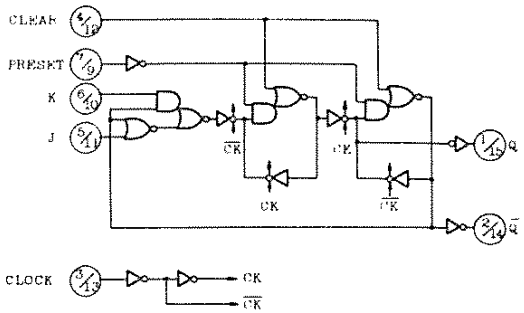

Timing Chart

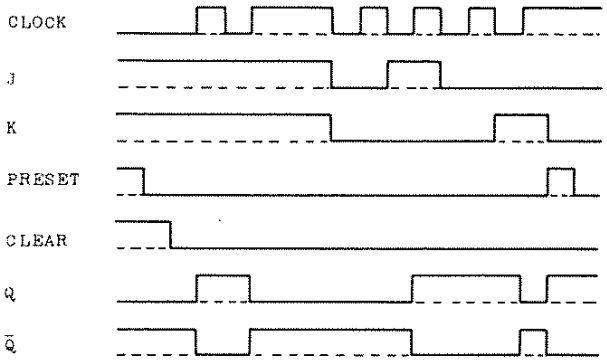

No.	Name	Description	No.	Name	Description
1	1Q	Output	16	VDD	+DC voltage supply
2	$\overline{1Q}$	Inverted output	15	2Q	Output
3	1CK	Clock input	14	$\overline{2Q}$	Inverted output
4	1CL	Clear input	13	2CK	Clock input
5	1K	Input (K)	12	2CL	Clear input
6	1J	Input (J)	11	2K	Input (K)
7	1PR	Preset	10	2J	Input (J)
8	Vss	−DC voltage supply	9	2PR	Preset

CIRCUIT ILLUSTRATION

MODEL **SS-30**

CIRCUIT BOARD . . **G3**

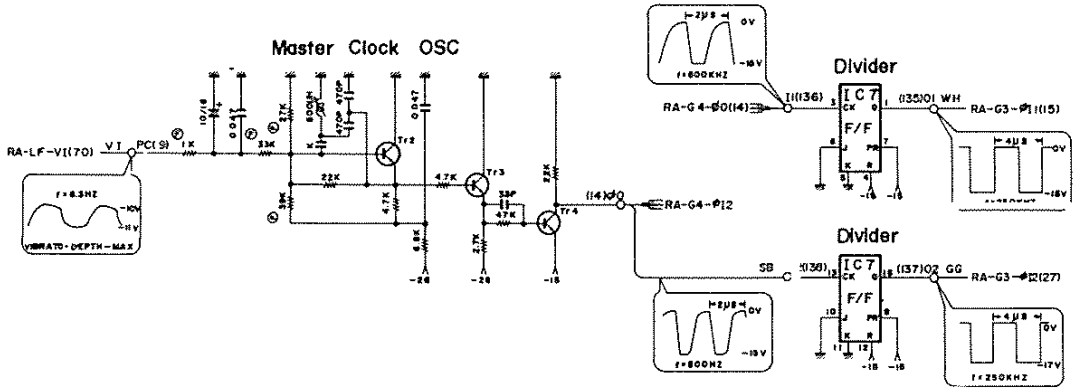

IC7 ..... TC4027BP

TC4028BP

Part No.	iG035500
made by	TOSHIBA

• FUNCTION

BCD TO DECIMAL DECODER

• OUTLINE DRAWING

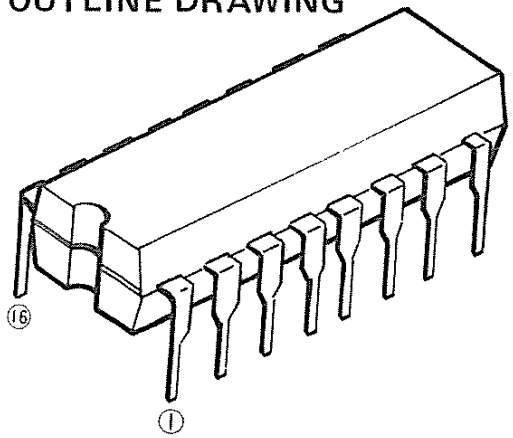

[Interchangeable parts]

CD4028B . . . . . RCA
MC14028B . . . . . MOTOROLA
F4028 . . . . . FAIRCHILD

• BLOCK & SCHEMATIC DIAGRAM

BLOCK DIAGRAM

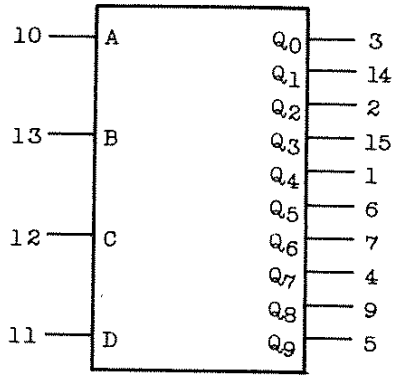

V_{DD} ; 16, V_{SS} ; 8

Note) VDD — VSS = 15V

TRUTH TABLE

INPUTS				SELECTED OUTPUT "H"
D	C	B	A	
L	L	L	L	Q_0
L	L	L	H	Q_1
L	L	H	L	Q_2
L	L	H	H	Q_3
L	H	L	L	Q_4
L	H	L	H	Q_5
L	H	H	L	Q_6
L	H	H	H	Q_7
H	※	※	L	Q_8
H	※	※	H	Q_9

※ Don't care

No.	Name	Description	No.	Name	Description
1	Q_4	Decoded out 4	16	VDD	+DC voltage supply
2	Q_2	" 2	15	Q_3	Decoded out 3
3	Q_0	" 0	14	Q_1	" 1
4	Q_7	" 7	13	B	Input B
5	Q_9	" 9	12	C	" C
6	Q_5	" 5	11	D	" D
7	Q_6	" 6	10	A	" A
8	VSS	—DC voltage supply	9	Q_8	Decoded out 8

• CIRCUIT ILLUSTRATION

MODEL **CS-40M**

CIRCUIT BOARD .. **PGM**

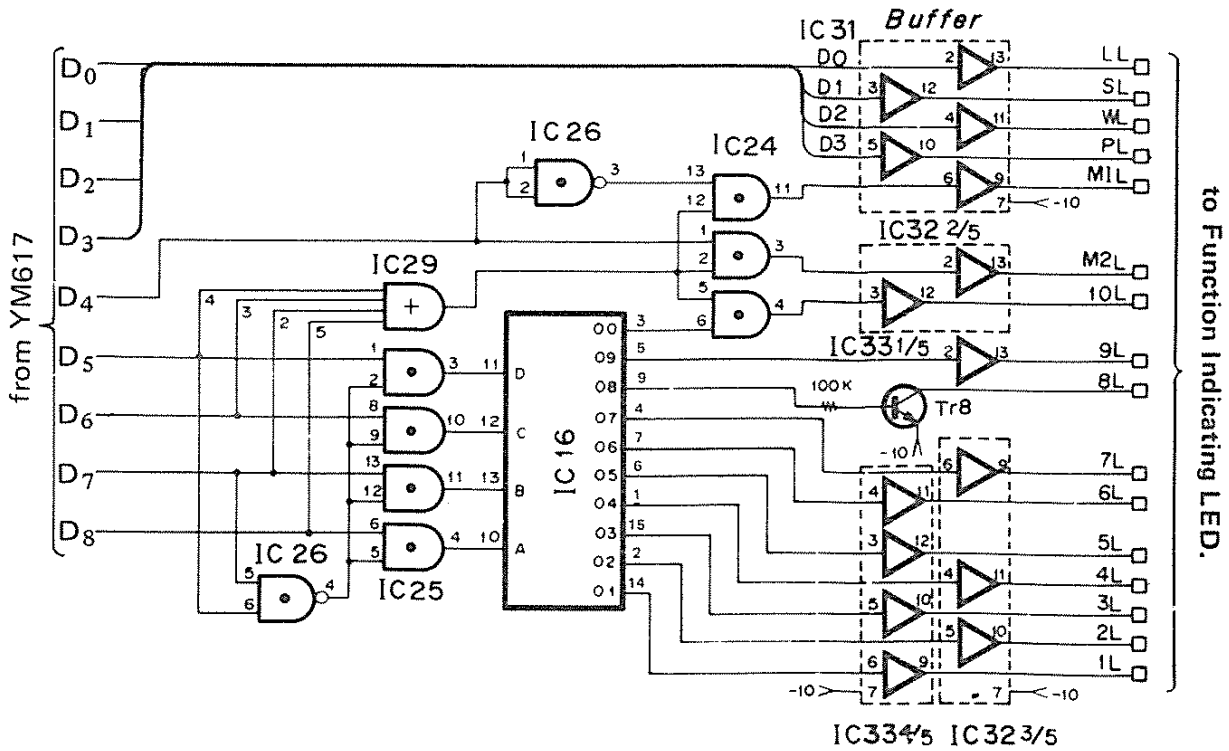

IC16 ..... TC4028BP

TC4030BP

Part No.	iG00179
made by	TOSHIBA

• FUNCTION

Exclusive OR Gate x 4

• OUTLINE DRAWING

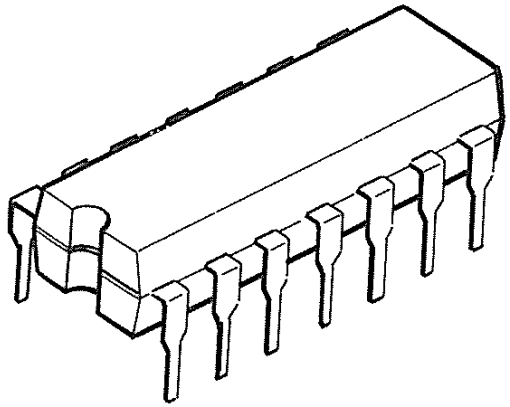

[Interchangeable parts]

CD4030B . . . . . RCA
MC14030B . . . . . MOTOROLA
F4030 . . . . . FAIRCHILD

• BLOCK & SCHEMATIC DIAGRAM

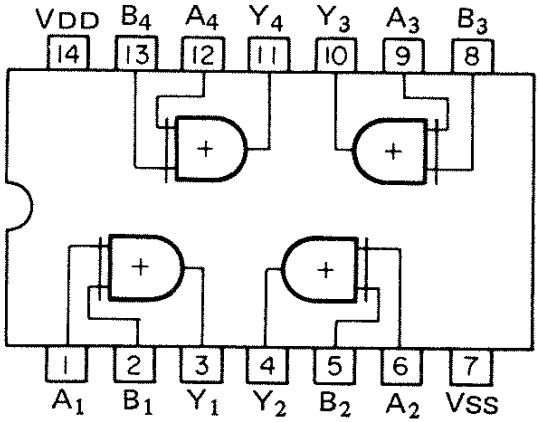

Note) VDD – VSS = 15V

TRUTH TABLE

INPUT		OUT
A	B	Y
L	L	L
H	L	H
L	H	H
H	H	L

No.	Name	Description	No.	Name	Description
1	A_1	Input	14	VDD	+DC voltage supply
2	B_1		13	B_4	Input
3	Y_1	Output	12	A_4	
4	Y_2	Output	11	Y_4	Output
5	B_2	Input	10	Y_3	Output
6	A_2		9	A_3	Input
7	V SS	–DC voltage supply	8	B_3	

• CIRCUIT ILLUSTRATION

MODEL **CS-40M**

CIRCUIT BOARD .. **IF**

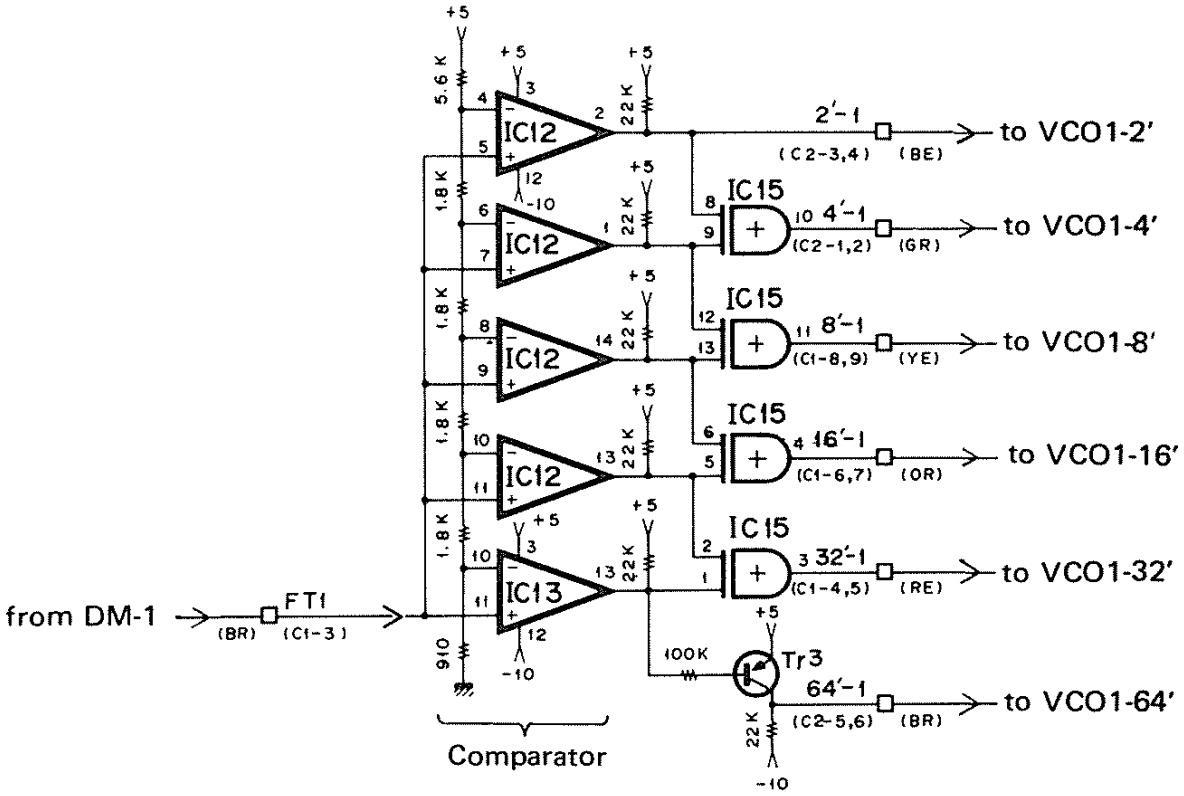

IC15 ..... TC4030BP

TC4049BP

Part No.	iG00126
made by	TOSHIBA

- **FUNCTION**
  HEX BUFFER/CONVERTER
  INVERTING TYPE

- **OUTLINE DRAWING**

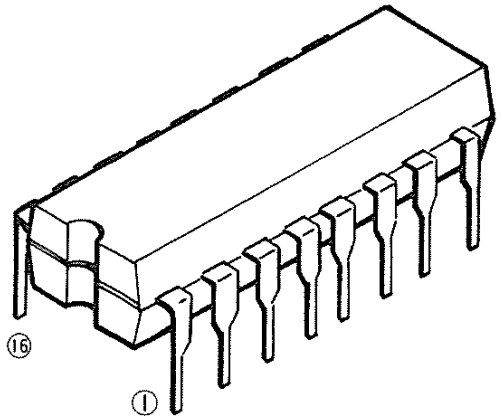

[Interchangeable parts]

CD4049B . . . . . RCA
MC14049B . . . . . MOTOROLA
F4049 . . . . . FAIRCHILD

- **BLOCK & SCHEMATIC DIAGRAM**

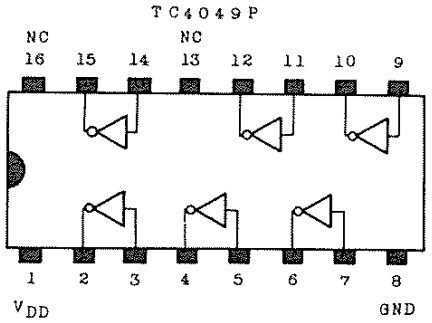

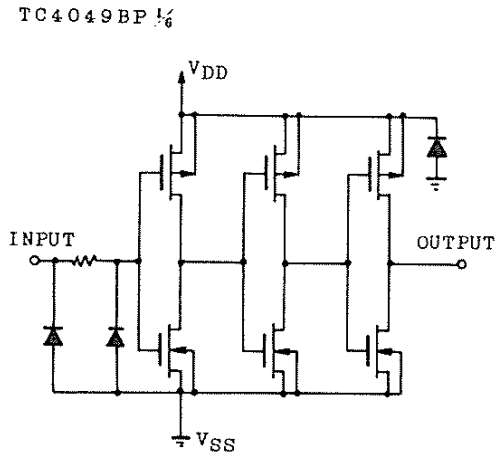

No.	Name	Description	No.	Name	Description
1	VDD	+DC voltage supply	16	NC	Non-connection
2	OUT	Output G=$\overline{A}$	15	OUT	Output L=$\overline{F}$
3	IN	Input A	14	IN	Input F
4	OUT	Output H=$\overline{B}$	13	NC	Non-connection
5	IN	Input B	12	OUT	Output K=$\overline{E}$
6	OUT	Output I=$\overline{C}$	11	IN	Input E
7	IN	Input C	10	OUT	Output J=$\overline{D}$
8	Vss	−DC voltage supply	9	IN	Input D

• CIRCUIT ILLUSTRATION

MODEL **CS-10**

CIRCUIT BOARD . . **VCO**

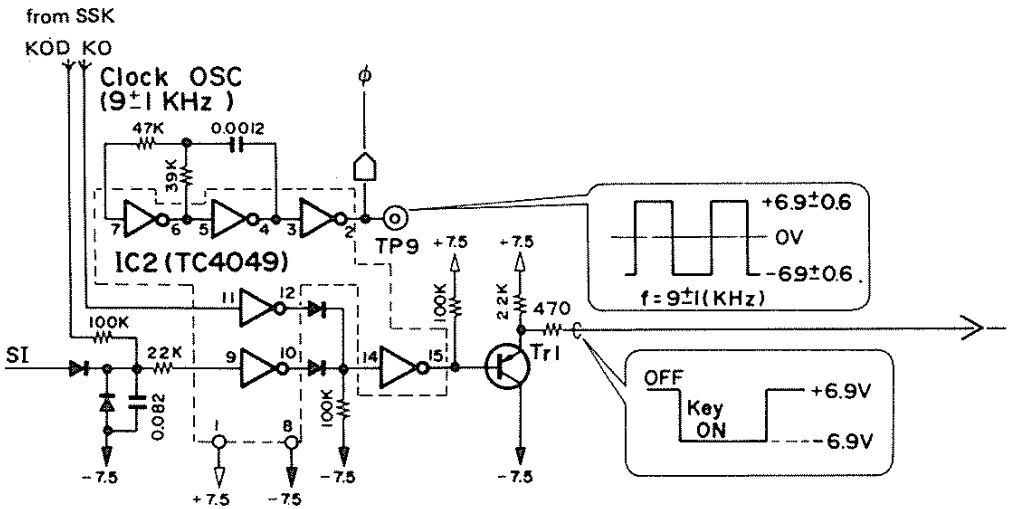

SINGLE-MULTI Change

TC4050BP

Part No.	iG00174
made by	TOSHIBA

- **FUNCTION**
  HEX BUFFER/CONVERTER
  NON-INVERTING

OUTLINE DRAWING

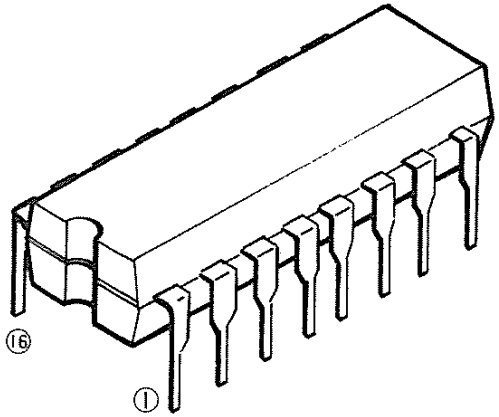

[Interchangeable parts]

CD4050B . . . . . RCA
MC14050B . . . . . MOTOROLA
F4050 . . . . . FAIRCHILD

BLOCK & SCHEMATIC DIAGRAM

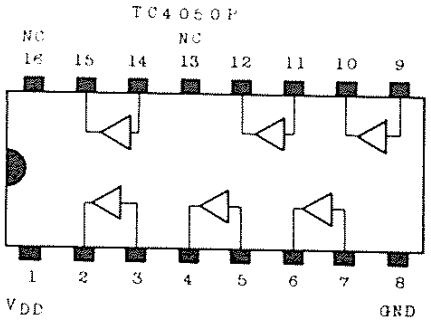

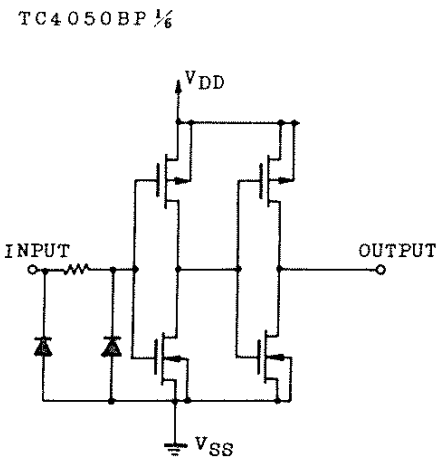

No.	Name	Description	No.	Name	Description
1	VDD	+DC voltage supply	16	NC	Non-connection
2	OUT	Output G=A	15	OUT	Output L=F
3	IN	Input A	14	IN	Input F
4	OUT	Output H=B	13	NC	Non-connection
5	IN	Input B	12	OUT	Output K=E
6	OUT	Output I=C	11	IN	Input E
7	IN	Input C	10	OUT	Output J=D
8	Vss	—DC voltage supply	9	IN	Input D

CIRCUIT ILLUSTRATION

MODEL **CS-50**

CIRCUIT BOARD .. **KAS**

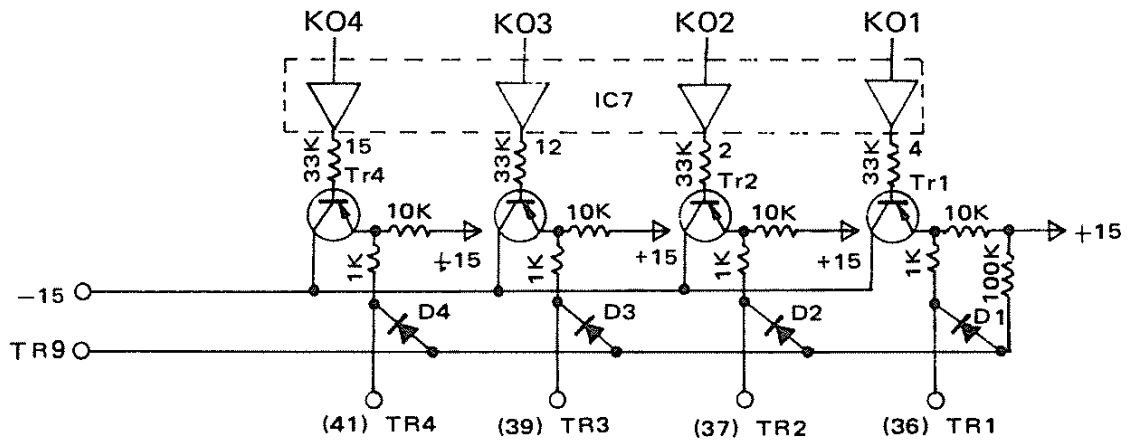

IC7 ..... TC4050BP

TC4051BP

Part No.	iG00177
made by	TOSHIBA

• FUNCTION

Single 8-ch Analog SW

• OUTLINE DRAWING

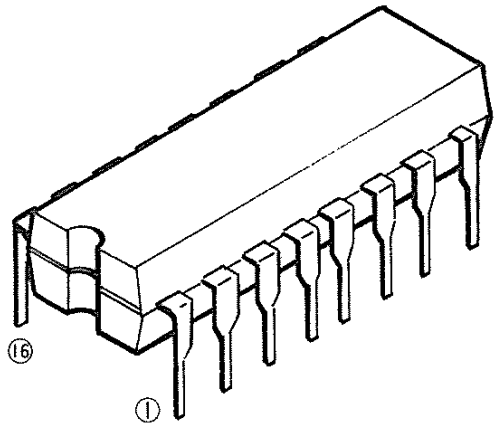

[Interchangeable parts]

CD4051B . . . . . RCA
MC14051B . . . . . MOTOROLA
F4051 . . . . . FAIRCHILD

• BLOCK & SCHEMATIC DIAGRAM

LOGIC DIAGRAM

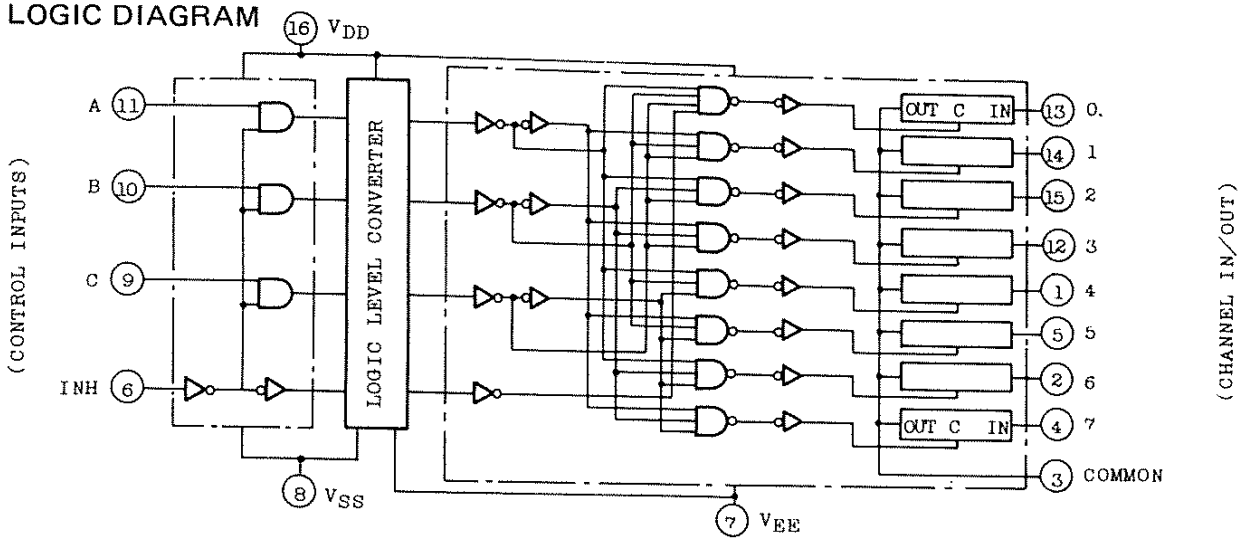

No.	Name	Description	No.	Name	Description
1	CH4	Channel IN/OUT 4	16	VDD	+DC voltage supply
2	CH6	" 6	15	CH2	Channel IN/OUT 2
3	COM	Common OUT/IN	14	CH1	" 1
4	CH7	Channel IN/OUT 7	13	CH0	" 0
5	CH5	" 5	12	CH3	" 3
6	INH	Control INHIBIT	11	A	Control input
7	VEE	—DC voltage supply	10	B	
8	Vss	—DC voltage supply	9	C	

• CIRCUIT ILLUSTRATION

MODEL **CS-80**

CIRCUIT BOARD . . **TSB**

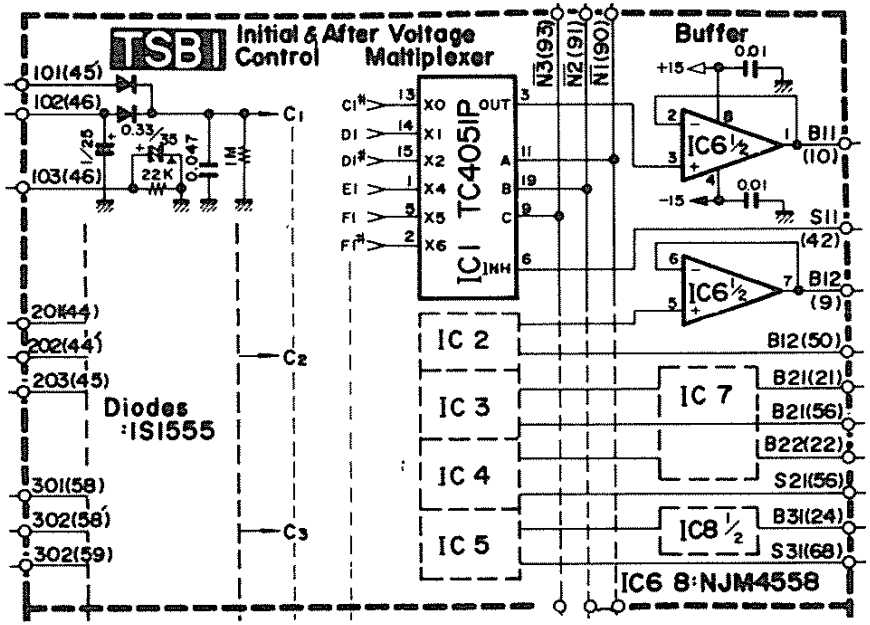

IC1, 2, 3, 4 & 5 ..... TC4051BP

TC4069UBP

Part No.	iG00172
made by	TOSHIBA

- **FUNCTION**

  Inverter x 6

- **OUTLINE DRAWING**

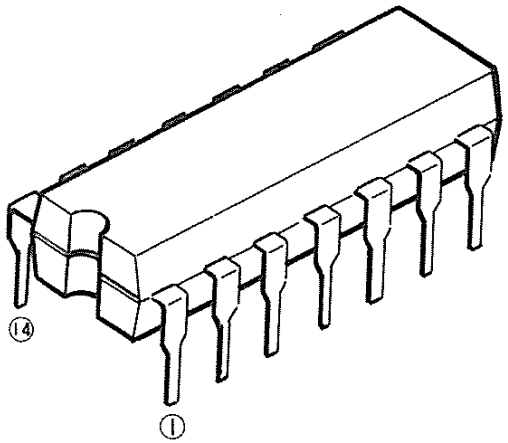

[Interchangeable parts]
CD4069A . . . . . RCA
MC14069 . . . . . MOTOROLA

- **BLOCK & SCHEMATIC DIAGRAM**

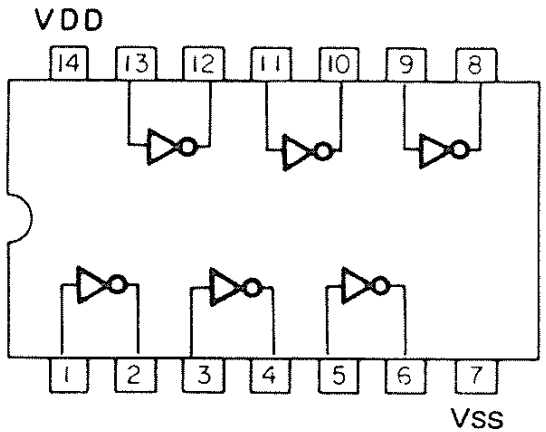

Note) VDD – VSS = 15V

No.	Name	Description	No.	Name	Description
1	IN	Input A	14	VDD	+DC voltage supply
2	OUT	Output G = $\overline{A}$	13	IN	Input F
3	IN	Input B	12	OUT	Output L = $\overline{F}$
4	OUT	Output H = $\overline{B}$	11	IN	Input E
5	IN	Input C	10	OUT	Output K = $\overline{E}$
6	OUT	Output I = $\overline{C}$	9	IN	Input D
7	VSS	–DC voltage supply	8	OUT	Output J = $\overline{D}$

● CIRCUIT ILLUSTRATION

MODEL **CS-40M**

CIRCUIT BOARD . . **PGM**

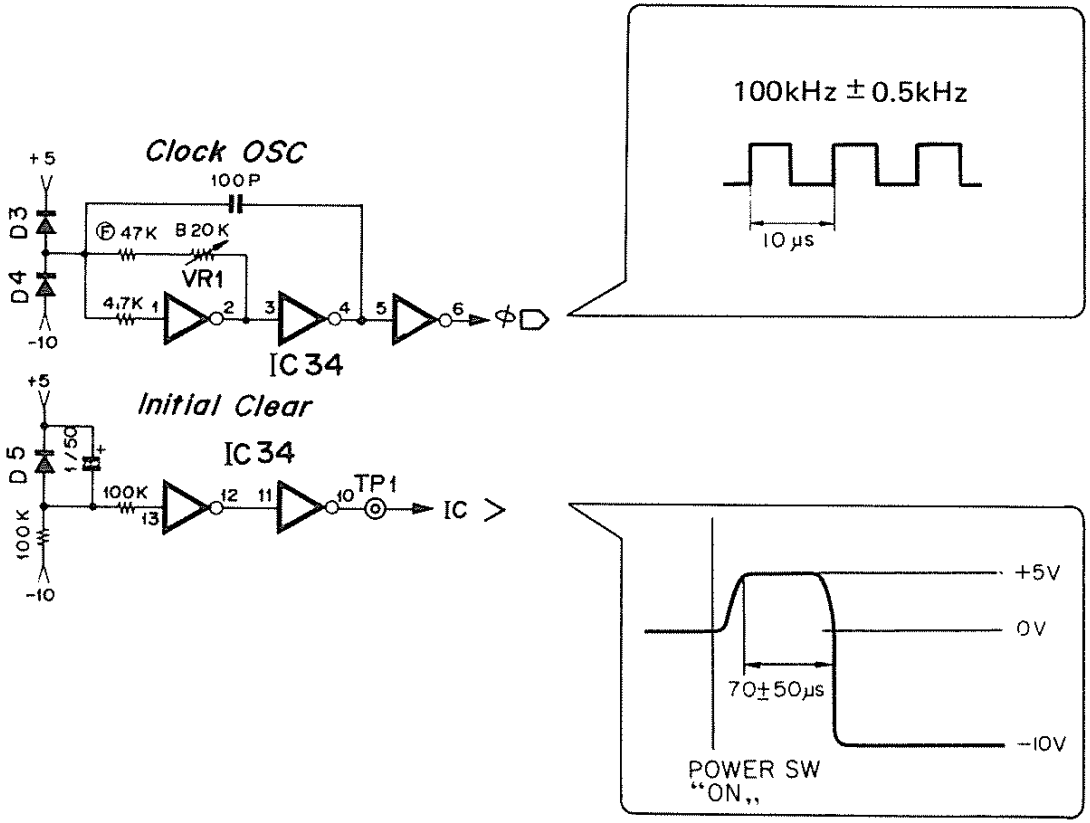

TC4071BP

Part No.	iG00144
made by	TOSHIBA

• FUNCTION

Quad 2-input Positive OR

• OUTLINE DRAWING

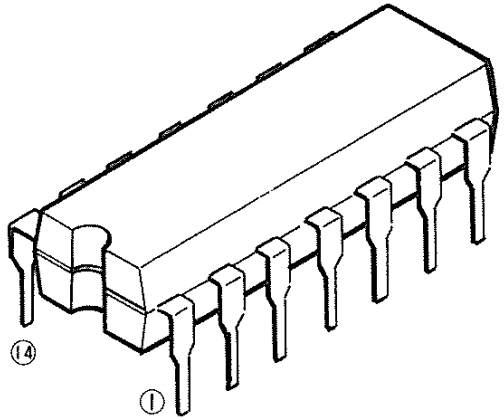

[Interchangeable parts]

CD4071B . . . . . RCA
MC14071B . . . . . MOTOROLA
F4071 . . . . . FAIRCHILD

• BLOCK & SCHEMATIC DIAGRAM

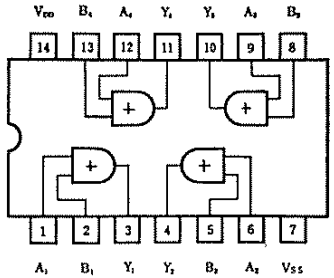

Truth Table

A	B	Y
L	L	L
H	L	H
L	H	H
H	H	H

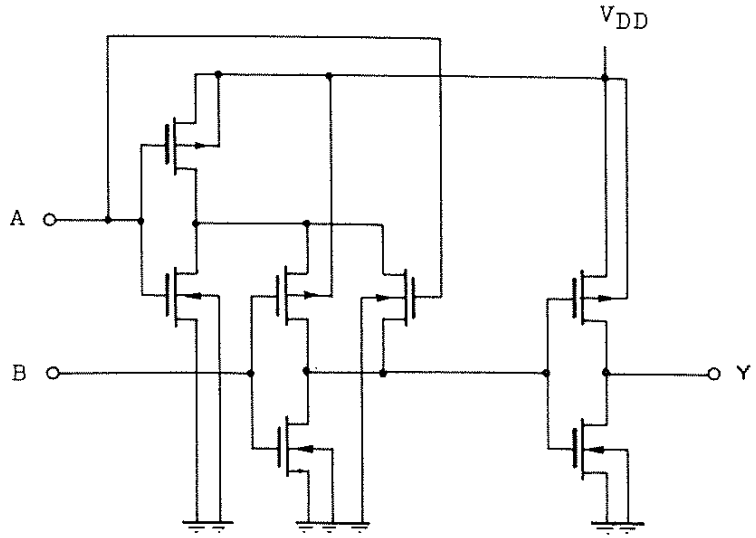

No.	Name	Description	No.	Name	Description
1	A_1	Input	14	VDD	+DC voltage supply
2	B_1		13	A_4	Input
3	Y_1	Output	12	B_4	
4	Y_2	Output	11	Y_4	Output
5	A_2	Input	10	Y_3	Output
6	B_2		9	A_3	Input
7	Vss	−DC voltage supply	8	B_3	

• CIRCUIT ILLUSTRATION

MODEL **CS-80**

CIRCUIT BOARD . . **TKC**

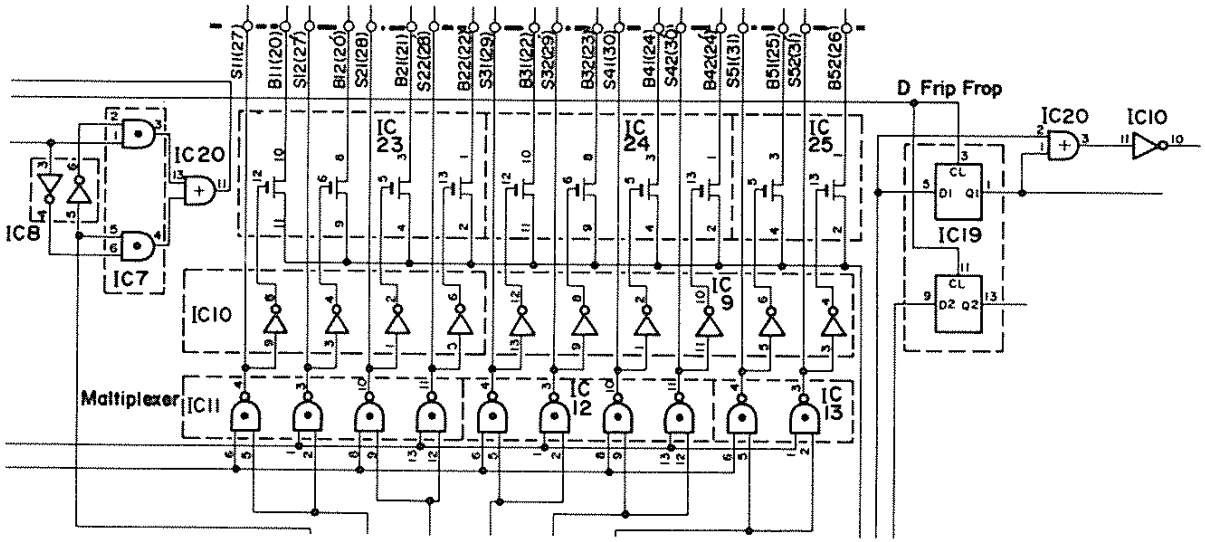

IC20····· TC4071BP

TC4072BP

Part No.	iG03630
made by	TOSHIBA

- **FUNCTION**

Dual 4-Input Positive OR

- **OUTLINE DRAWING**

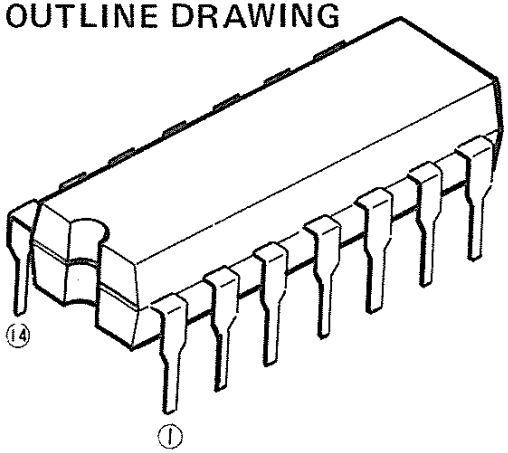

[Interchangeable parts]
CD4072B . . . . . RCA
MC14072B . . . . . MOTOROLA
F4072 . . . . . FAIRCHILD

- **BLOCK & SCHEMATIC DIAGRAM**

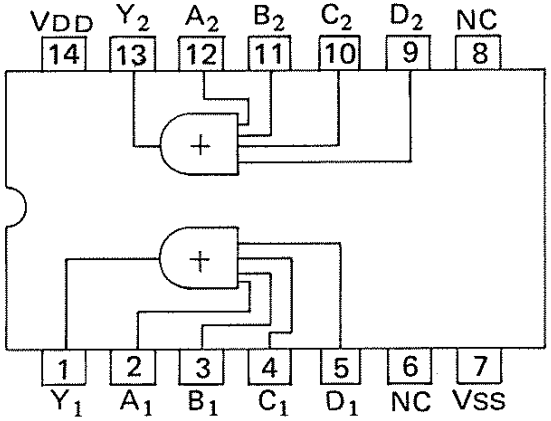

$Y = A + B + C + D$

Note) $V_{DD} - V_{SS} = 15V$

No.	Name	Description	No.	Name	Description
1	Y_1	Output 1	14	VDD	+DC voltage supply
2	A_1	Input 1	13	Y_2	Output 2
3	B_1		12	A_2	Input 2
4	C_1		11	B_2	
5	D_1		10	C_2	
6	NC	Non-Connection	9	D_2	
7	VSS	—DC voltage supply	8	NC	Non-Connection

• CIRCUIT ILLUSTRATION

MODEL **CS-40M**

CIRCUIT BOARD .. **PGM**

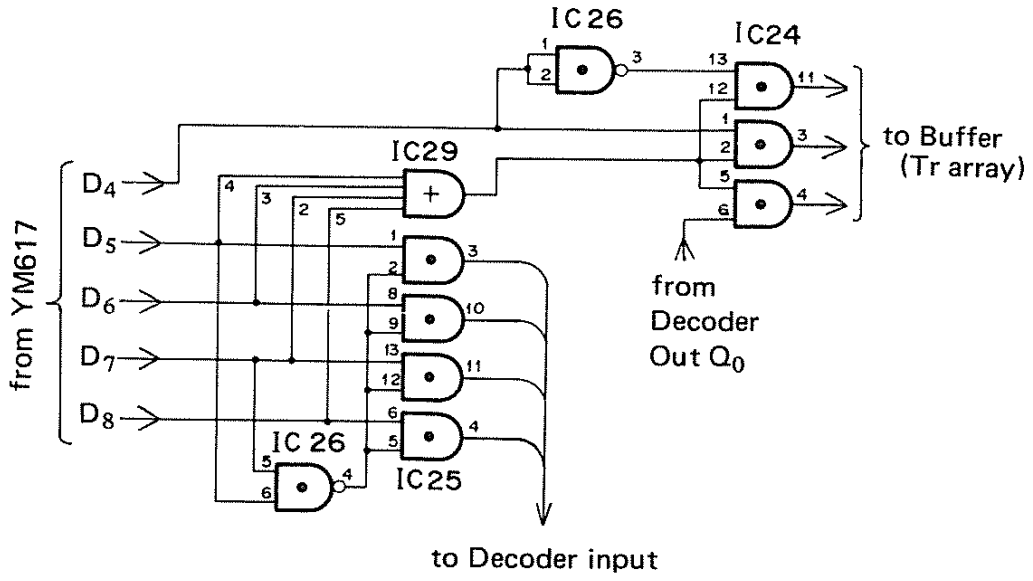

IC29 ..... TC4072BP

TC4073BP

Part No.	iG00173
made by	TOSHIBA

• FUNCTION

Triple 3-input Positive AND

• OUTLINE DRAWING

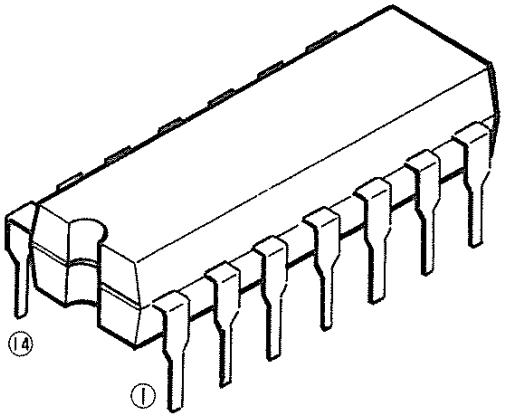

[Interchangeable parts]

CD4073B . . . . . RCA
MC14073B . . . . . MOTOROLA
F4073 . . . . . FAIRCHILD

• BLOCK & SCHEMATIC DIAGRAM

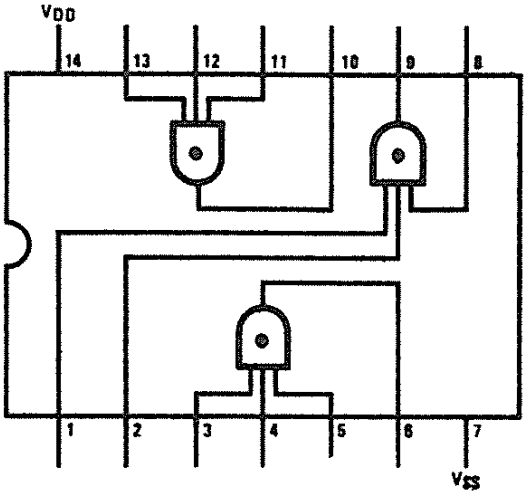

Truth Table

INPUT			OUTPUT
A	B	C	Y
L	L	L	L
L	L	H	L
L	H	L	L
L	H	H	L
H	L	L	L
H	L	H	L
H	H	L	L
H	H	H	H

No.	Name	Description	No.	Name	Description
1	A_2	Input	14	VDD	+DC voltage supply
2	B_2		13	A_3	Input
3	A_1	Input	12	B_3	
4	B_1		11	C_3	
5	C_1		10	Y_3	Output
6	Y_1	Output	9	Y_2	Output
7	Vss	—DC voltage supply	8	C_2	Input

• CIRCUIT ILLUSTRATION

MODEL **CS-60**

CIRCUIT BOARD . . **KBC**

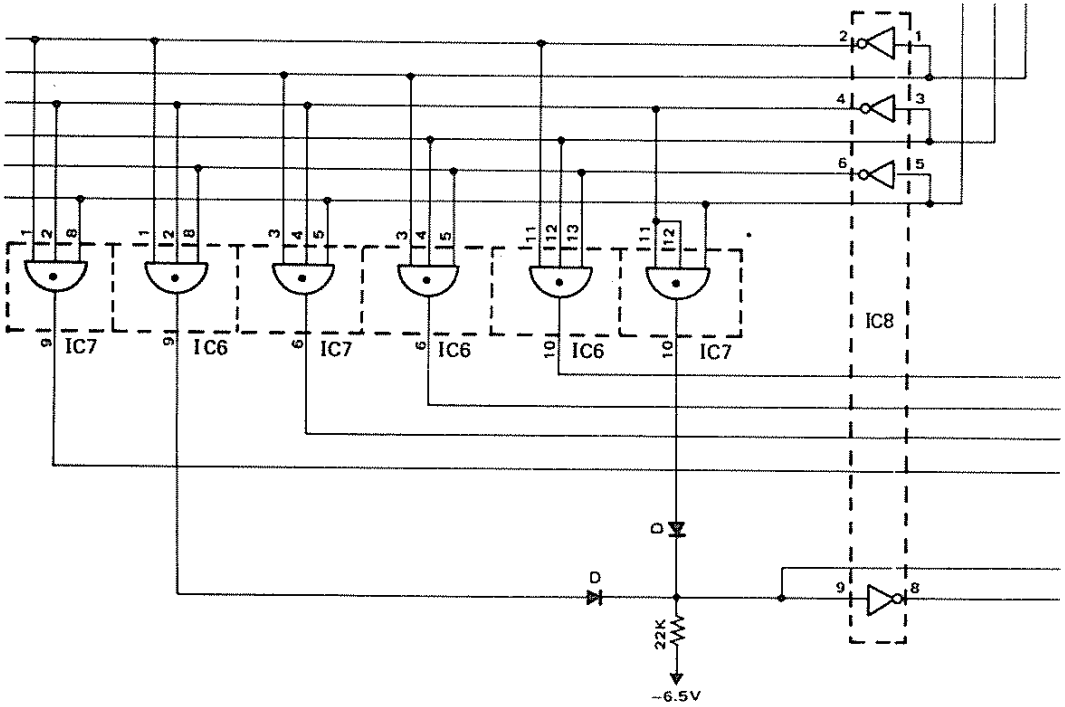

IC6 & 7 ..... TC4073BP

TC4075BP

Part No.	iG03570
made by	TOSHIBA

- **FUNCTION**

Triple 3-Input Positive OR

- **OUTLINE DRAWING**

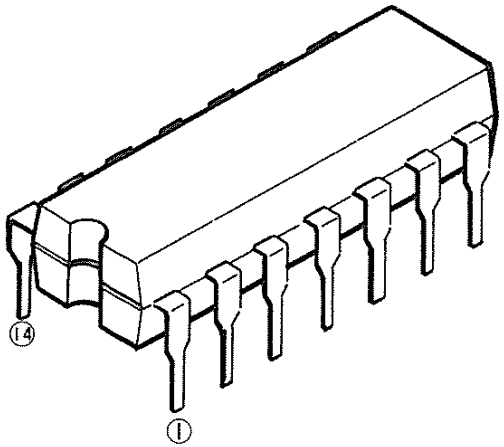

[Interchangeable parts]
CD4075B . . . . . RCA
MC14075B . . . . . MOTOROLA
F4075 . . . . . FAIRCHILD

- **BLOCK & SCHEMATIC DIAGRAM**

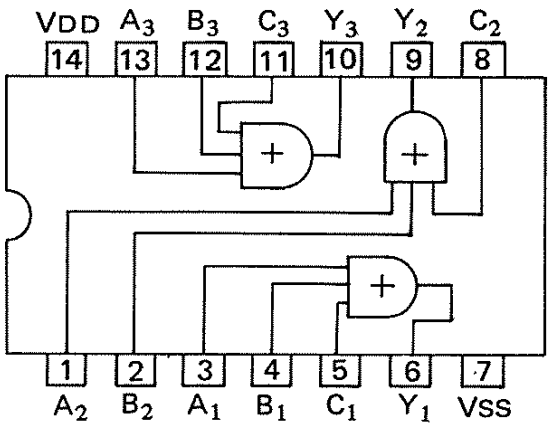

NOTE) VDD – VSS = 15V

Truth Table

Input			Output
A	B	C	Y
L	L	L	L
L	L	H	H
L	H	L	H
L	H	H	H
H	L	L	H
H	L	H	H
H	H	L	H
H	H	H	H

No.	Name	Description	No.	Name	Description
1	A_2	Input	14	V_{DD}	+DC voltage supply
2	B_2		13	A_3	Input
3	A_1	Input	12	B_3	
4	B_1		11	C_3	
5	C_1		10	Y_3	Output
6	Y_1	Output	9	Y_2	Output
7	V_{SS}	–DC voltage supply	8	C_2	Input

CIRCUIT ILLUSTRATION

MODEL **CS-40M**

CIRCUIT BOARD .. **PA**

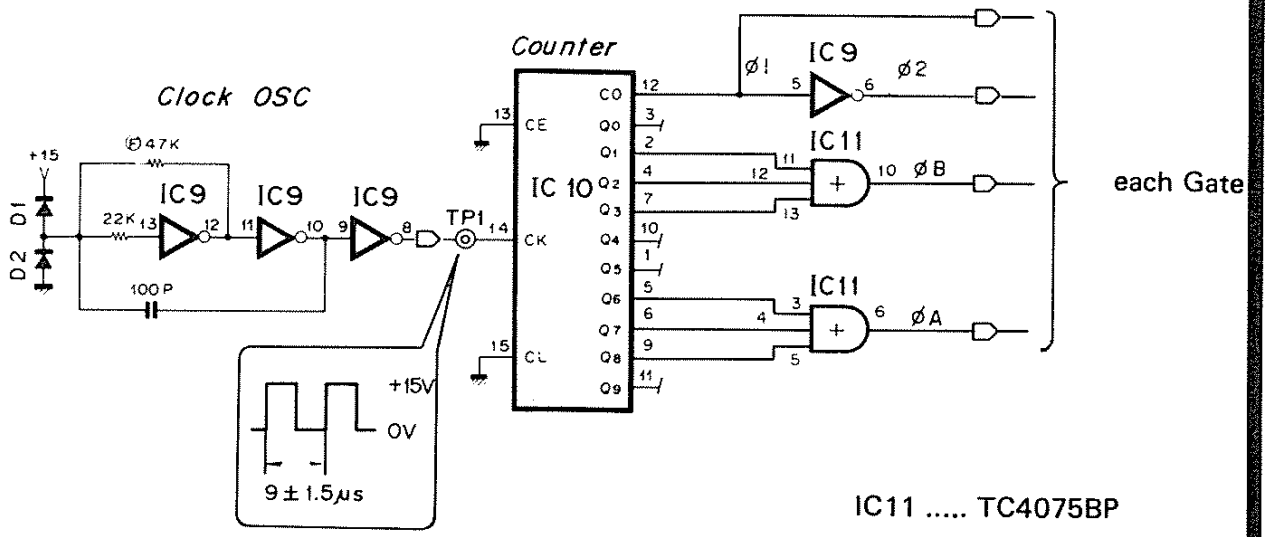

IC11 ..... TC4075BP

The IC10 is a decimal system counter.
At the "H" level, the gate will be switched on.

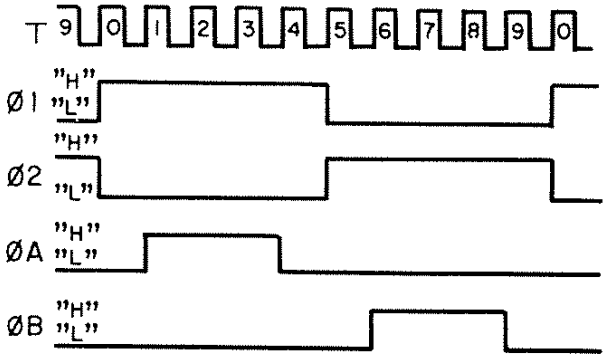

TC4081BP

Part No.	iG00176
made by	TOSHIBA

• FUNCTION

Quad 2-input Positive AND

• OUTLINE DRAWING

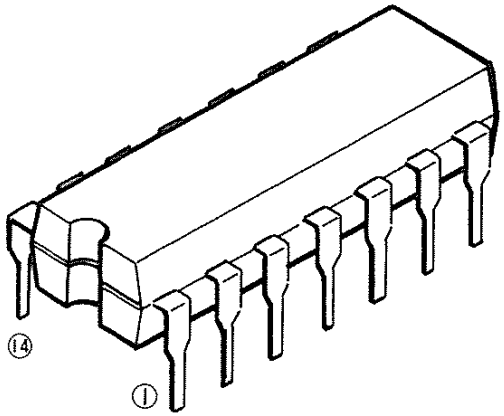

[Interchangeable parts]

CD4081B . . . . . RCA
MC14081B . . . . . MOTOROLA
F4081 . . . . . FAIRCHILD

• BLOCK & SCHEMATIC DIAGRAM

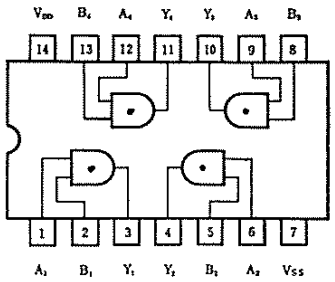

Truth Table

A	B	Y
L	L	L
H	L	L
L	H	L
H	H	H

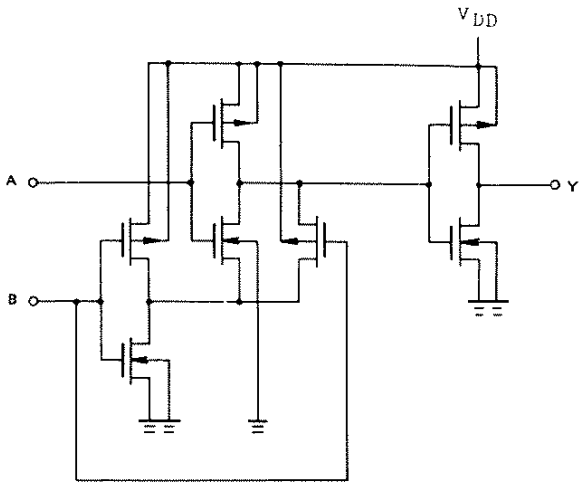

No.	Name	Description	No.	Name	Description
1	A_1	Input	14	VDD	+DC voltage supply
2	B_1		13	A_4	Input
3	Y_1	Output	12	B_4	
4	Y_2	Output	11	Y_4	Output
5	A_2	Input	10	Y_3	Output
6	B_2		9	A_3	Input
7	Vss	—DC voltage supply	8	B_3	

• CIRCUIT ILLUSTRATION

MODEL **CS-80**

CIRCUIT BOARD . . **TKC**

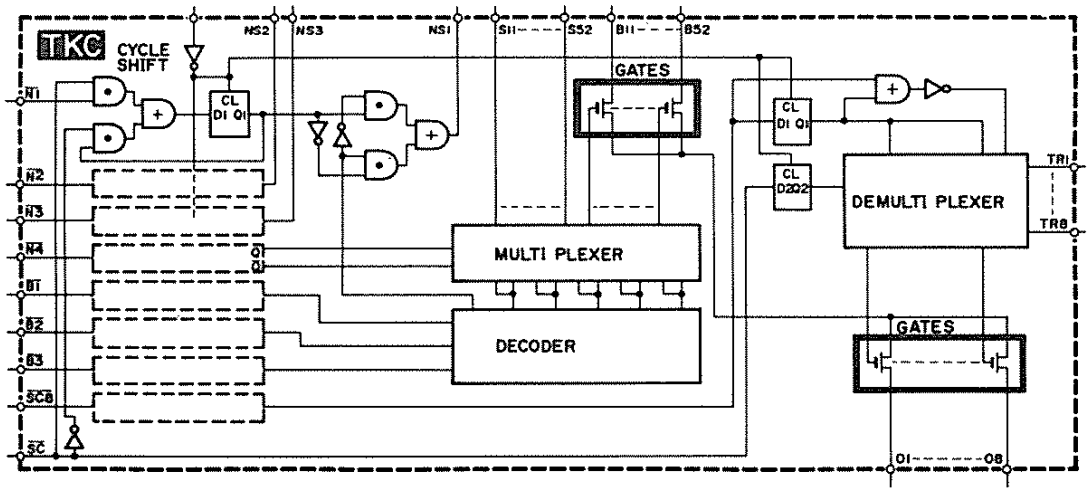

TC4532BP

Part No.	iG03560
made by	TOSHIBA

• FUNCTION

8-bit Priority Encoder

• OUTLINE DRAWING

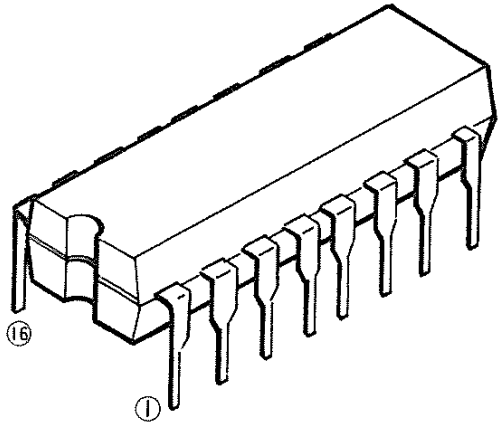

[Interchangeable parts]
CD4532B . . . . . RCA
MC14532B . . . . . MOTOROLA

• BLOCK & SCHEMATIC DIAGRAM

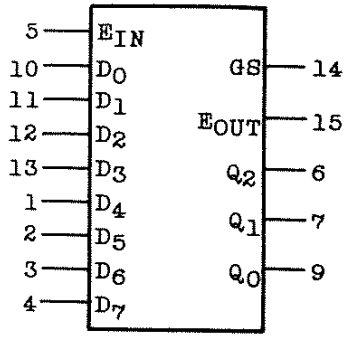

V_{DD} ; 16, V_{SS} ; 8

TRUTH TABLE

INPUT									OUTPUT				
E_{IN}	D_7	D_6	D_5	D_4	D_3	D_2	D_1	D_0	GS	Q_2	Q_1	Q_0	E_{OUT}
L	※	※	※	※	※	※	※	※	L	L	L	L	L
H	L	L	L	L	L	L	L	L	L	L	L	L	H
H	H	※	※	※	※	※	※	※	H	H	H	H	L
H	L	H	※	※	※	※	※	※	H	H	H	L	L
H	L	L	H	※	※	※	※	※	H	H	L	H	L
H	L	L	L	H	※	※	※	※	H	H	L	L	L
H	L	L	L	L	H	※	※	※	H	L	H	H	L
H	L	L	L	L	L	H	※	※	H	L	H	L	L
H	L	L	L	L	L	L	H	※	H	L	L	H	L
H	L	L	L	L	L	L	L	H	H	L	L	L	L

※ Don't Care

No.	Name	Description	No.	Name	Description
1	D_4	Data input 4	16	V_{DD}	+DC supply voltage
2	D_5	" 5	15	E_{OUT}	Enable output
3	D_6	" 6	14	GS	Group select output
4	D_7	" 7	13	D_3	Data input 3
5	E_{IN}	Enable input	12	D_2	" 2
6	Q_2	Address output 2	11	D_1	" 1
7	Q_1	" 1	10	D_0	" 0
8	V_{SS}	−DC supply voltage	9	Q_0	Address output 0

• CIRCUIT ILLUSTRATION

MODEL **CS-40M**

CIRCUIT BOARD . . **PGM**

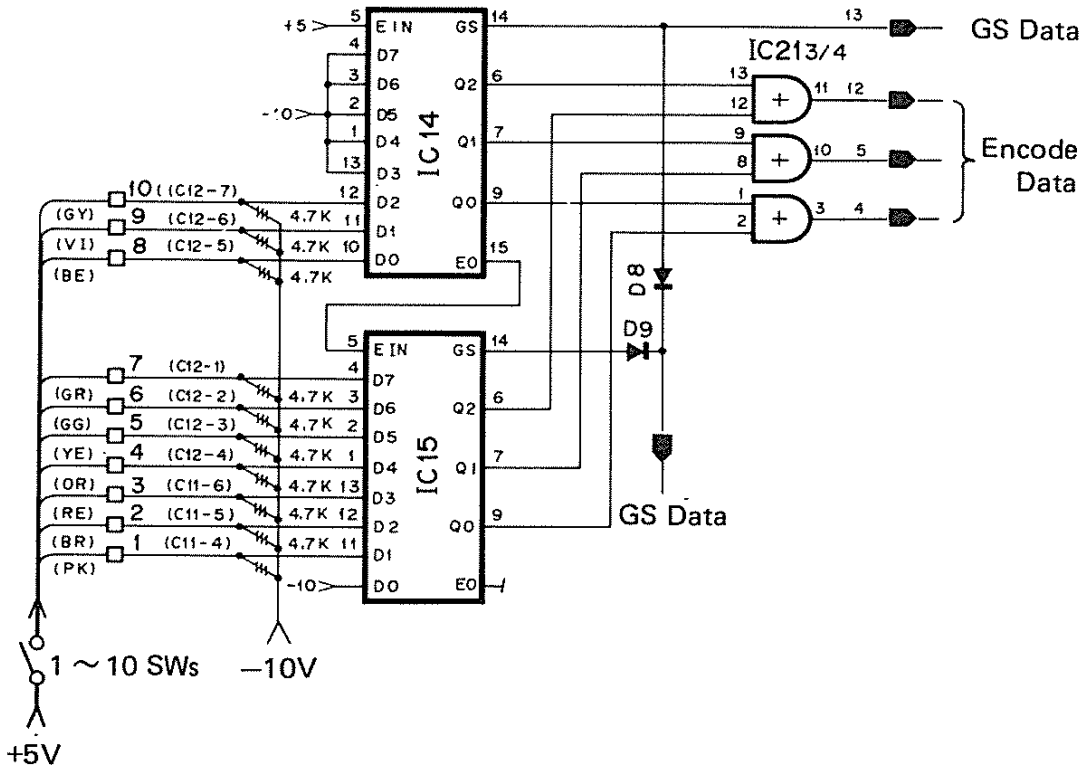

IC14, 15 ..... TC4532BP

CA3080

Part No.	iG00036
made by	RCA

- **FUNCTION**

OP. Amp.

- **OUTLINE DRAWING**

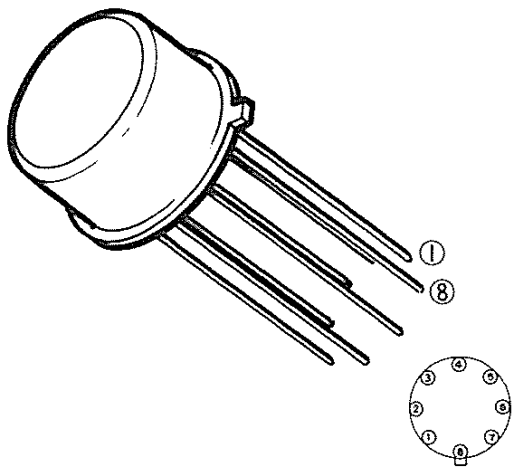

[Bottom View]

- **BLOCK & SCHEMATIC DIAGRAM**

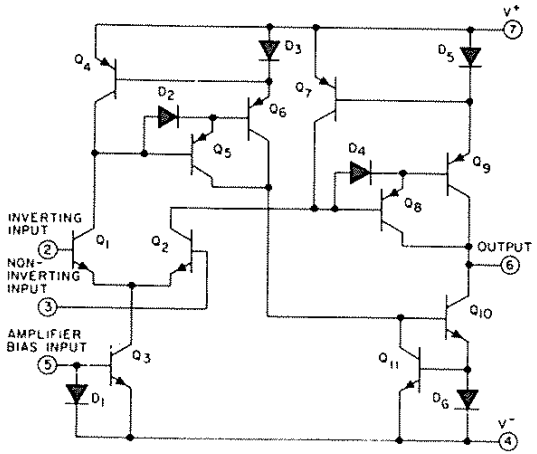

No.	Name	Description	No.	Name	Description
1	NC	Non Connection			
2	IN-	Inverting input			
3	IN+	Non Inverting input			
4	VEE	—DC voltage supply			
5	BI	Amplifier bias input			
6	Out	Output			
7	Vcc	+DC voltage supply			
8	NC	Non-connection			

• CIRCUIT ILLUSTRATION

MODEL **CP-30**

CIRCUIT BOARD . . **A**

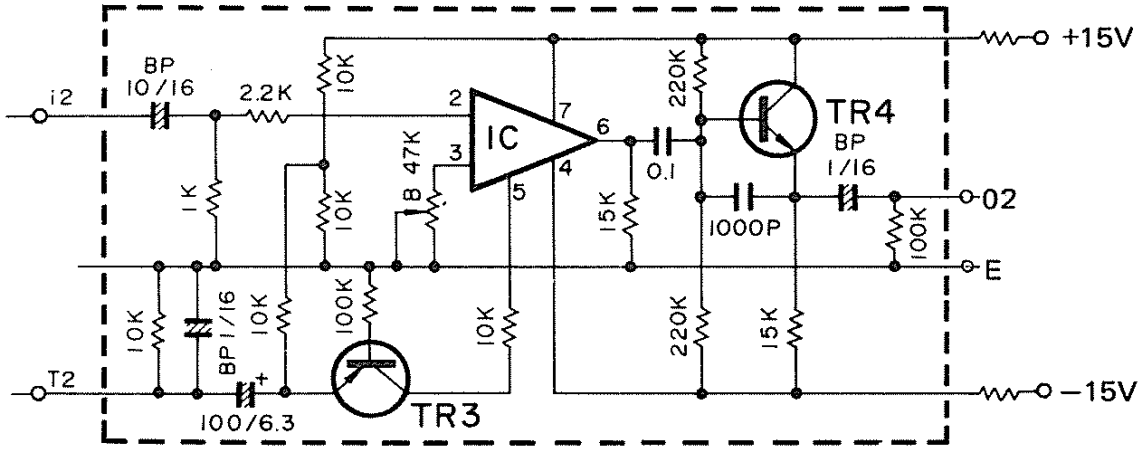

CA3140

Part No.	iG00222
made by	RCA

● FUNCTION

High Input Impedance OP. Amp.

● OUTLINE DRAWING

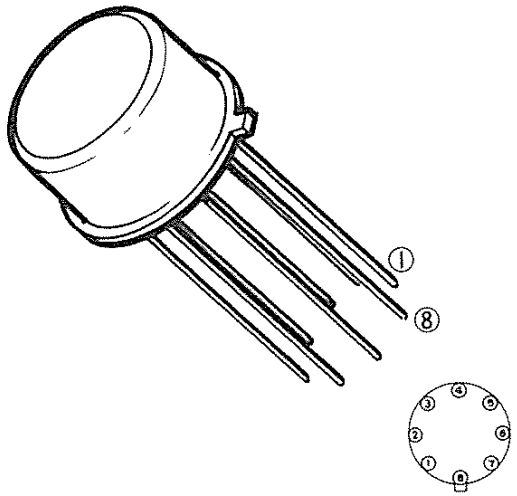

[Bottom View]

● BLOCK & SCHEMATIC DIAGRAM

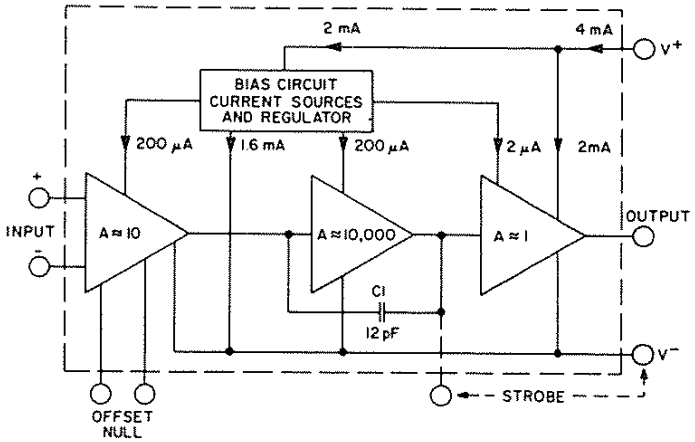

No.	Name	Description	No.	Name	Description
1	OFFSET	Offset null			
2	− INPUT	Inverting input			
3	+ INPUT	Non-inverting input			
4	VEE	−DC voltage supply			
5	OFFSET	Offset null			
6	OUT	Output			
7	Vcc	+DC voltage supply			
8	VOFFSET	Offset voltage null			

● CIRCUIT ILLUSTRATION

MODEL **CS-60**

CIRCUIT BOARD . . **SUB**

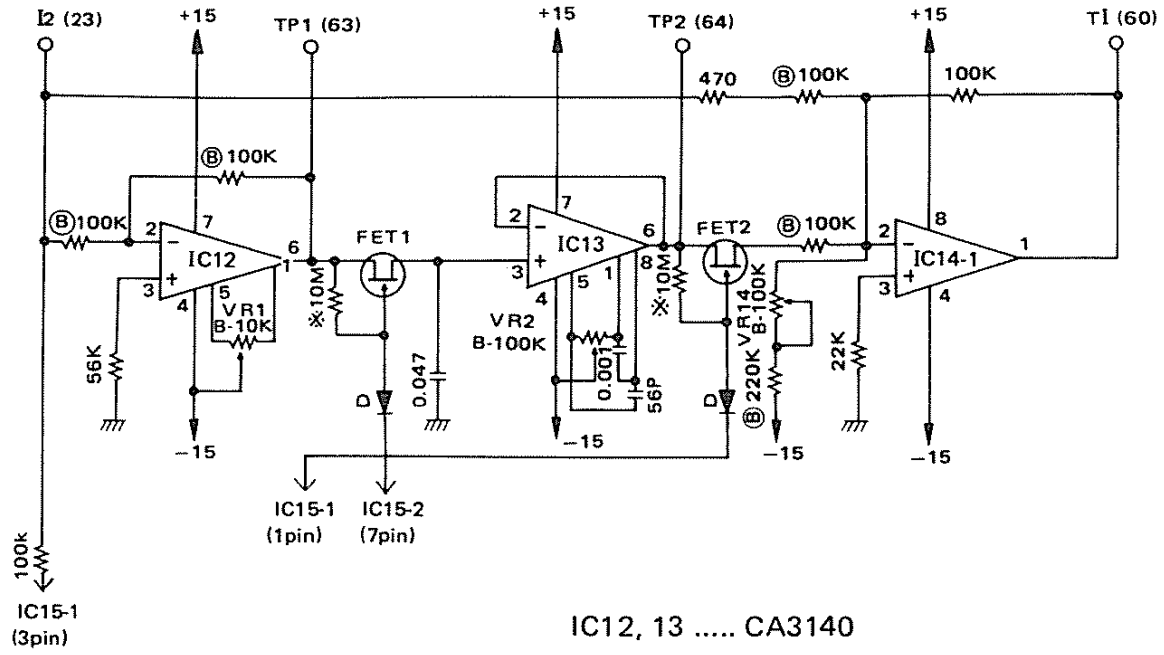

IC12, 13 ..... CA3140

NJM2901

Part No.	iG03610
made by	JRC

● FUNCTION

QUAD COMPARATOR

● OUTLINE DRAWING

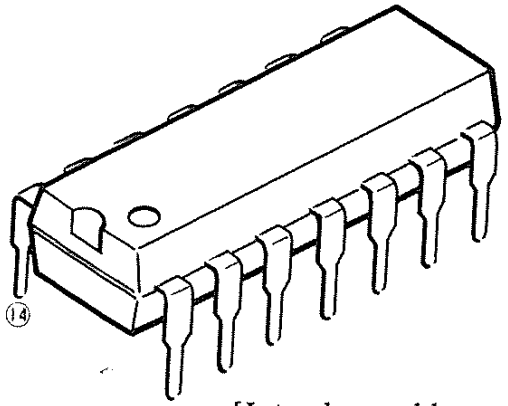

[Interchangeable parts]

LM2901 ..... NSC

● BLOCK & SCHEMATIC DIAGRAM

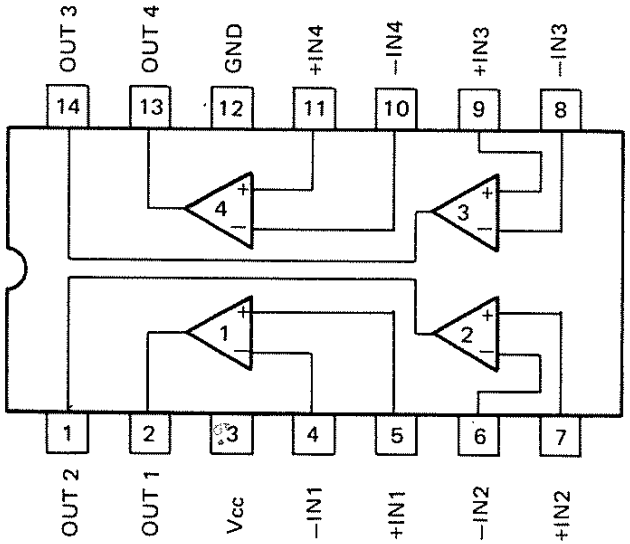

No.	Name	Description	No.	Name	Description
1	OUT2	Output 2	14	OUT3	Output 3
2	OUT1	Output 1	13	OUT4	Output 4
3	Vcc	+DC voltage supply	12	GND	Ground
4	−IN1	Inverting Input 1	11	+IN4	Non-Inverting Input 4
5	+IN1	Non-Inverting Input 1	10	−IN4	Inverting Input 4
6	−IN2	Inverting Input 2	9	+IN3	Non-Inverting Input 3
7	+IN2	Non-Inverting Input 2	8	−IN3	Inverting Input 3

• CIRCUIT ILLUSTRATION

MODEL **CS-20M**

CIRCUIT BOARD . . **MOD**

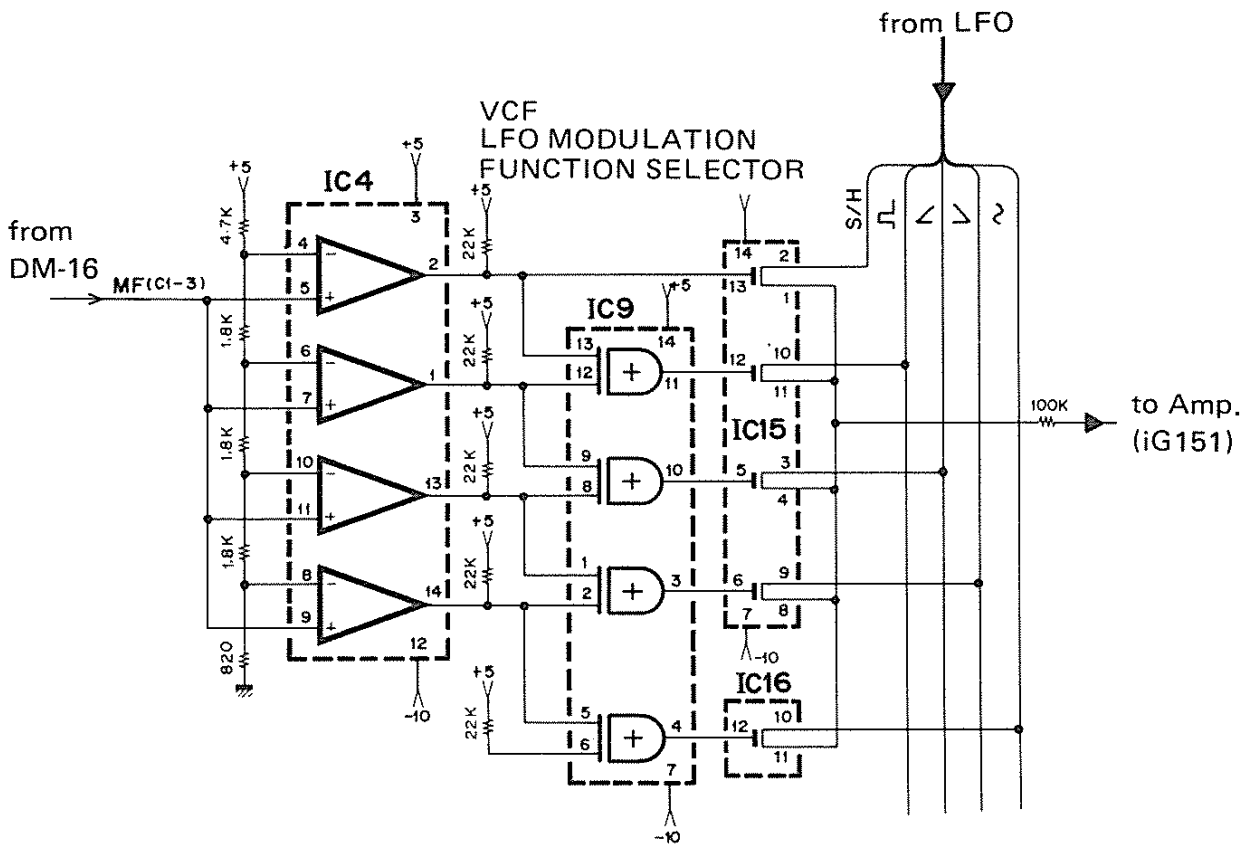

IC4 ..... NJM2901

NJM4558

Part No.	iG00139
made by	JRC

- **FUNCTION**

Dual OP Amp.

- **OUTLINE DRAWING**

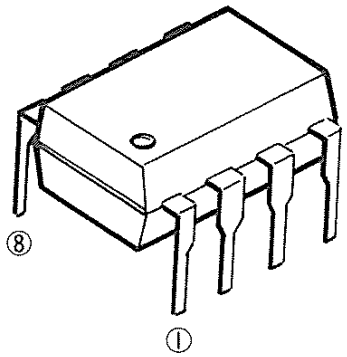

[Interchangeable parts]
RC4558 . . . . . RAYTHEON
MC4558 . . . . . MOTOROLA

- **BLOCK & SCHEMATIC DIAGRAM**

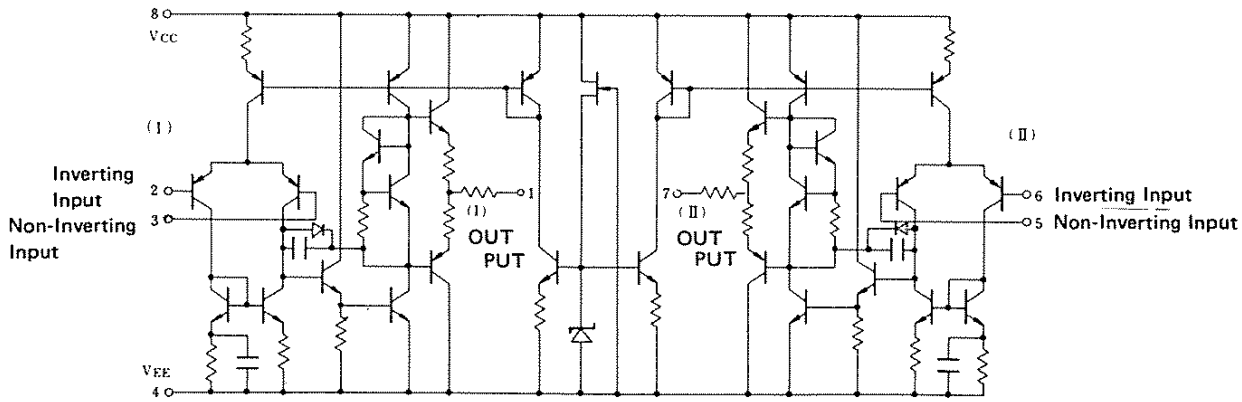

No.	Name	Description	No.	Name	Description
1	Out 1	Output 1	8	Vcc	+DC voltage supply
2	− IN 1	Inverting input 1	7	OUT2	Output 2
3	+ IN 1	Non-Inventing input 1	6	−IN2	Inverting input 2
4	VEE	−DC voltage supply	5	+IN2	Non-Inverting input 2

• CIRCUIT ILLUSTRATION

MODEL **CS-5**

CIRCUIT BOARD . . **PN1 1/2**

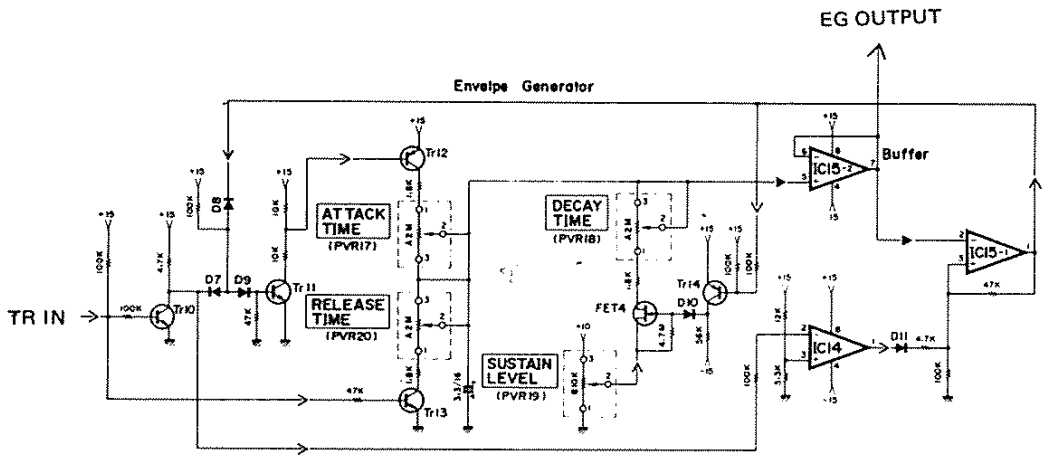

IC4 & 5 ..... NJM4558DV

TA7504S

Part No.	iG02550
made by	TOSHIBA

● FUNCTION

Operational Amplifier

● OUTLINE DRAWING

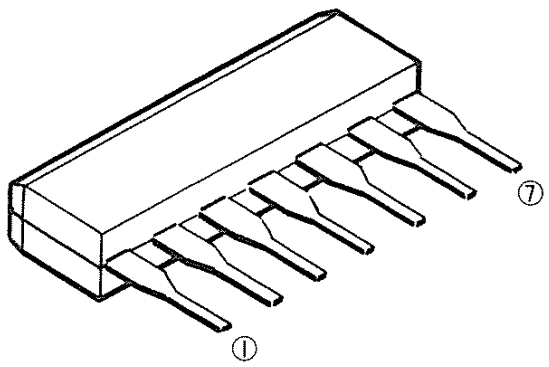

● BLOCK & SCHEMATIC DIAGRAM

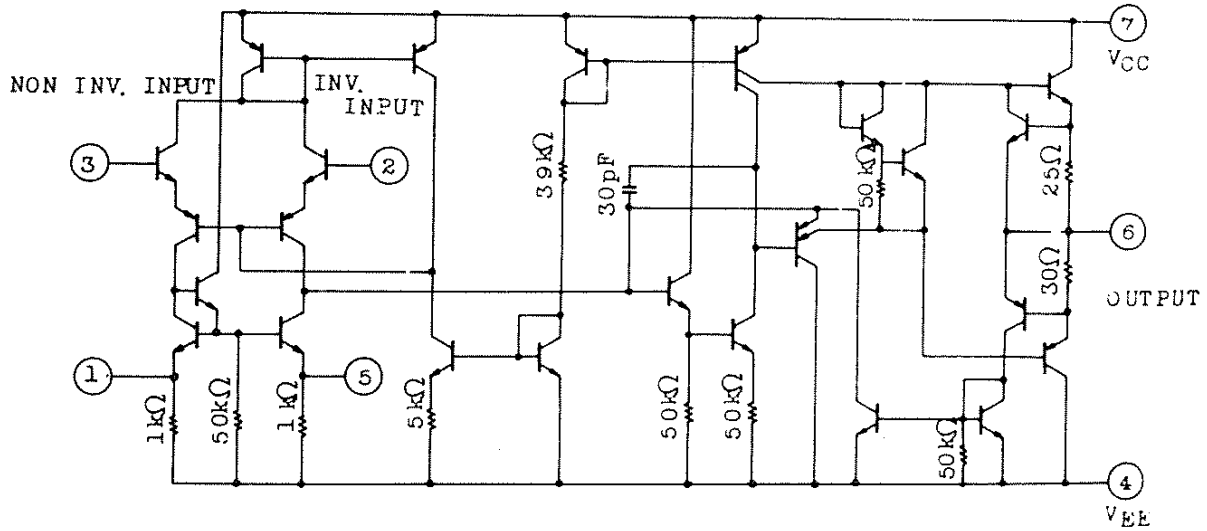

No.	Name	Description	No.	Name	Description
1		Offset Null			
2	– IN	Inverting input			
3	+ IN	Non-Inverting input			
4	VEE	–DC voltage supply			
5		Offset Null			
6	Out	Output			
7	Vcc	+DC voltage supply			

• CIRCUIT ILLUSTRATION

MODEL **CS-15**

CIRCUIT BOARD . . **CPA**

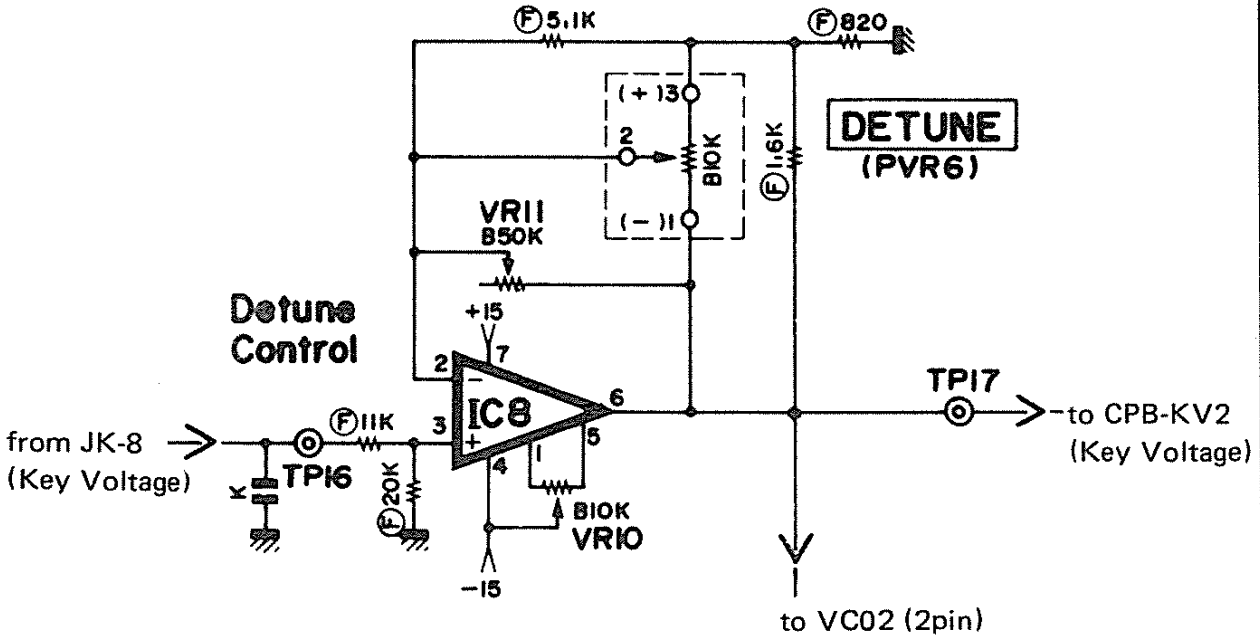

TA7505M

Part No.	iG02560
made by	TOSHIBA

● FUNCTION

High Input Impedance OP. Amp.

● OUTLINE DRAWING

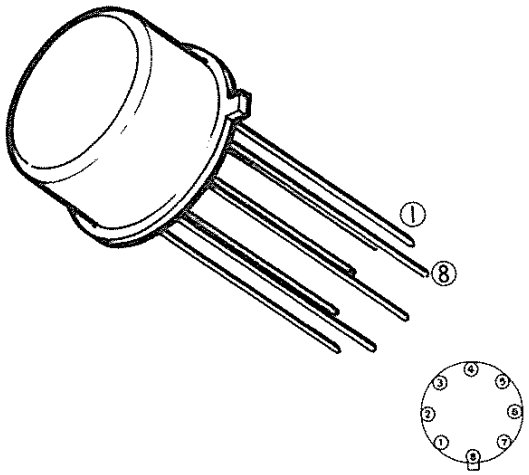

[Bottom View]

● BLOCK & SCHEMATIC DIAGRAM

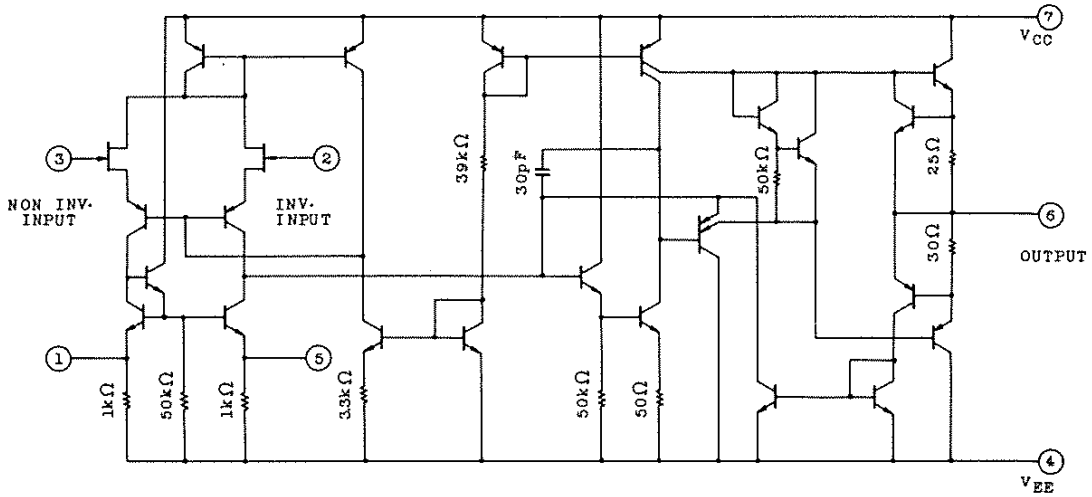

No.	Name	Description	No.	Name	Description
1		Offset Null			
2	– IN	Inverting Input			
3	+ IN	Non-Inverting input			
4	VEE	–DC voltage supply			
5		Offset Null			
6	Out	Output			
7	Vcc	+DC voltage supply			
8		Offset Voltage Null			

• CIRCUIT ILLUSTRATION

MODEL **CS-5**

CIRCUIT BOARD . . **PN1 2/2**

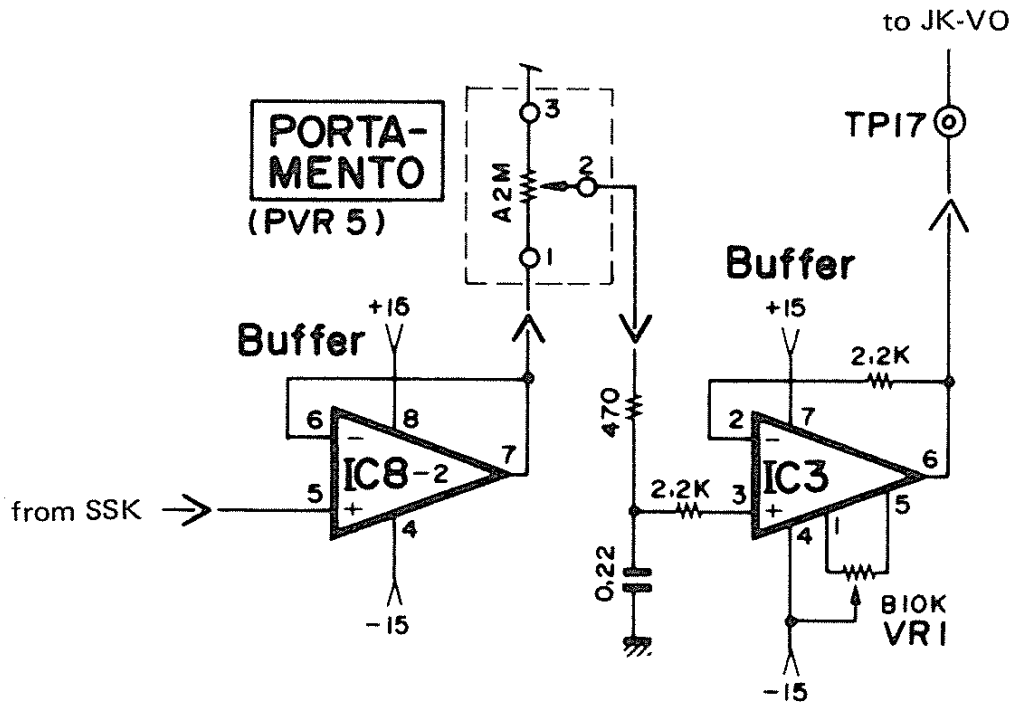

IC3 ..... TA7505M

TA7531M

Part No.	iG03250
made by	TOSHIBA

- FUNCTION

High Input Impedance OP. Amp

- OUTLINE DRAWING

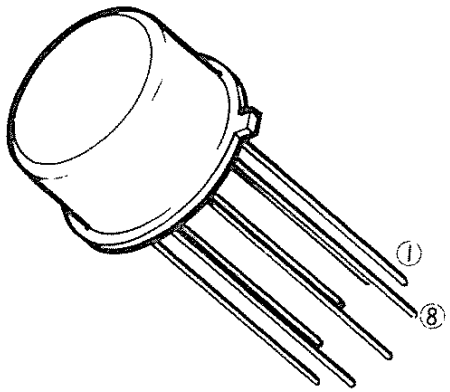

- BLOCK & SCHEMATIC DIAGRAM

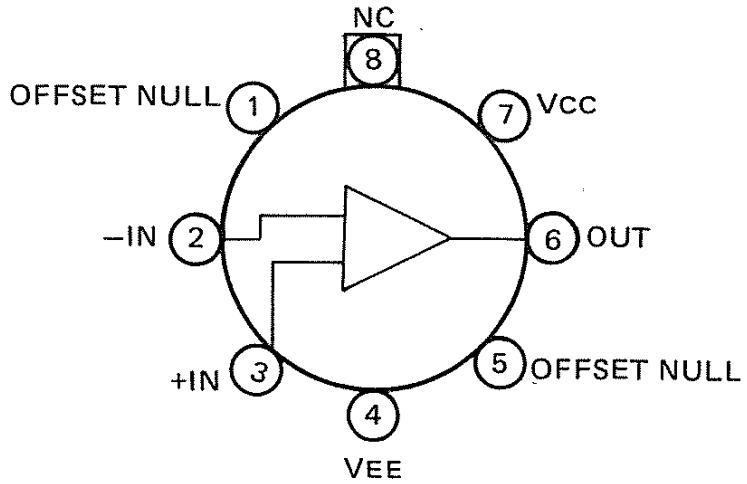

(TOP VIEW)

No.	Name	Description	No.	Name	Description
1		Offset Null			
2	–IN	Inverting input			
3	+IN	Non-Inverting input			
4	VEE	–DC voltage supply			
5		Offset Null			
6	Out	Output			
7	Vcc	+DC voltage supply			
8	NC	Non-connection			

• CIRCUIT ILLUSTRATION

MODEL **CS-40M**

CIRCUIT BOARD . . **PGM**

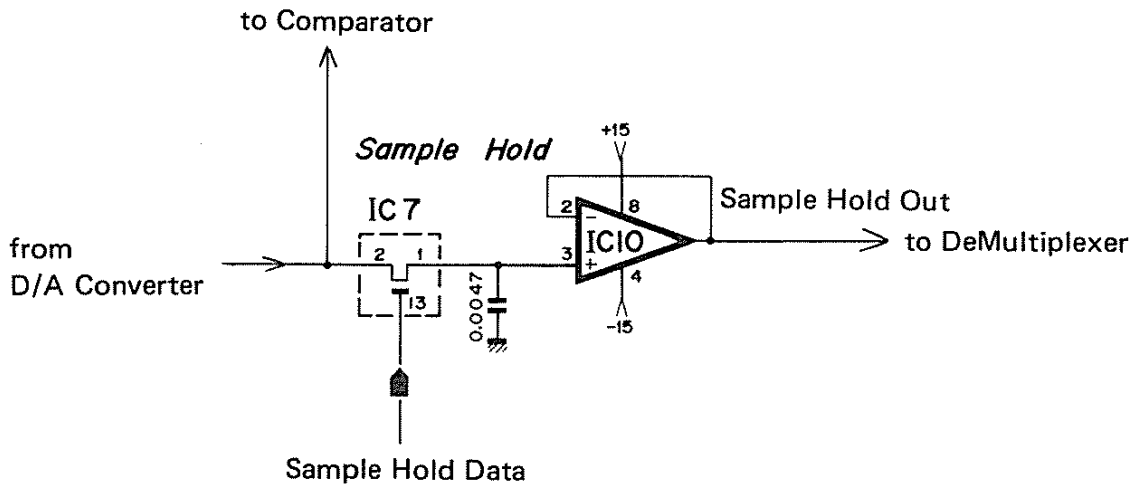

IC10 ..... TA7531M

μA310H

Part No.	iG00121
made by	FAIRCHILD

- **FUNCTION**

  Voltage Follower

- **OUTLINE DRAWING**

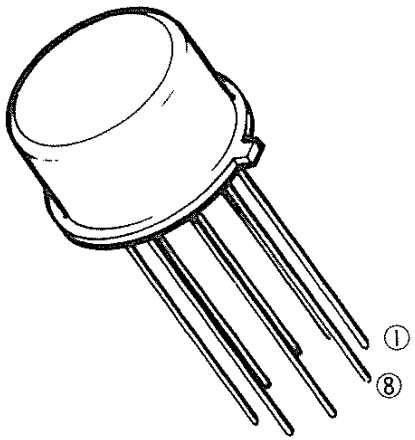

- **BLOCK & SCHEMATIC DIAGRAM**

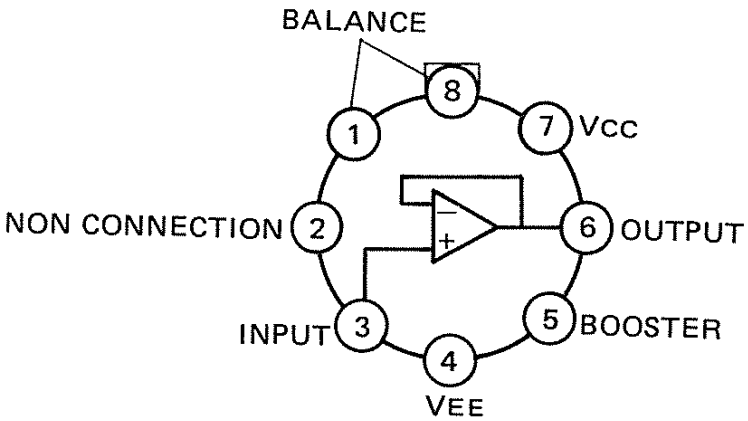

NOTE: Pin 4 connected to case.

TOP VIEW

No.	Name	Description	No.	Name	Description
1		Balance			
2	NC	Non-connection			
3	IN	Input			
4	VEE	—DC voltage supply			
5		Booster			
6	OUT	Output			
7	VCC	+DC voltage supply			
8		Balance			

• CIRCUIT ILLUSTRATION

MODEL **CS-40M**

CIRCUIT BOARD .. **PGM**

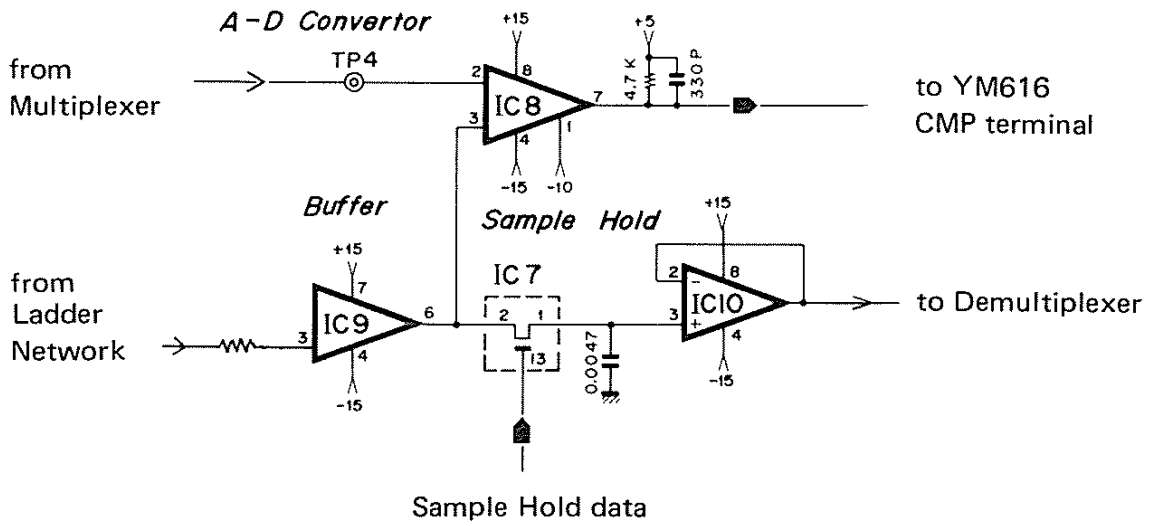

..... Analog data

..... Degital data

IC9 ..... μA310H

μPC271C

Part No.	iG03620
made by	NEC

● FUNCTION

Voltage Comparator

● OUTLINE DRAWING

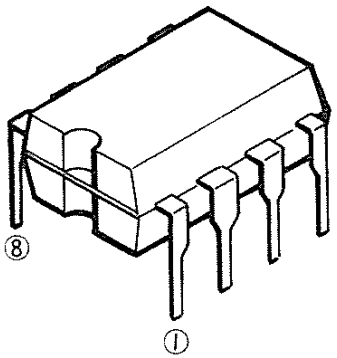

[Interchangeable parts]

LM311 ..... NSC

● BLOCK & SCHEMATIC DIAGRAM

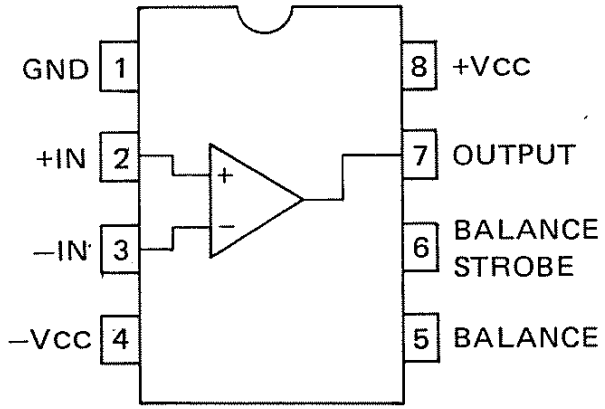

No.	Name	Description	No.	Name	Description
1	GND	Ground	8	+VCC	+DC voltage supply
2	+IN	Non-Inverting Input	7	OUT	Output
3	−IN	Inverting Input	6		Balance strobe
4	−VCC	−DC voltage supply	5		Balance

CIRCUIT ILLUSTRATION

MODEL **CS-40M**

CIRCUIT BOARD .. **PGM**

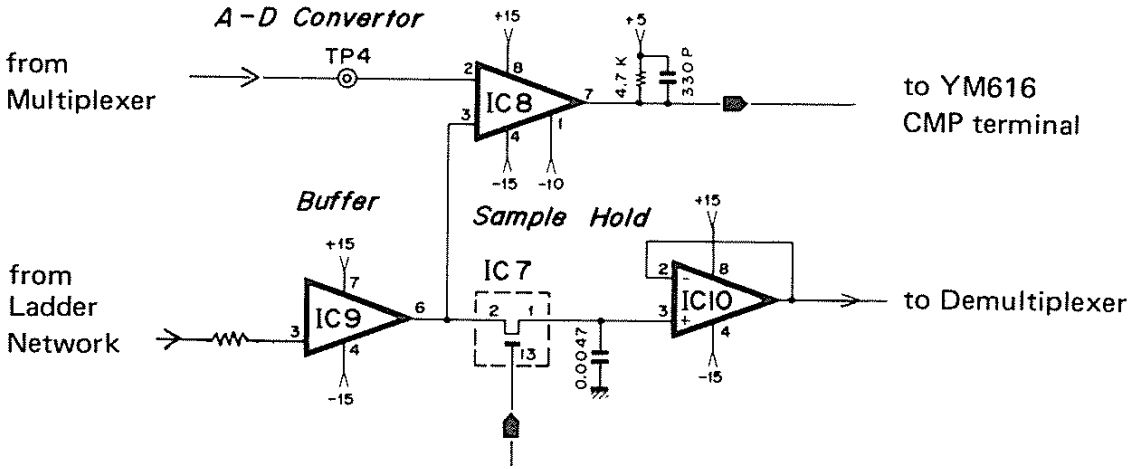

..... Analog data

..... Degital data

IC8 ..... μPC271C

HA1452W

Part No.	iG00102
made by	HITACHI

- **FUNCTION**

2ch Audio Pre-amplifier

- **OUTLINE DRAWING**

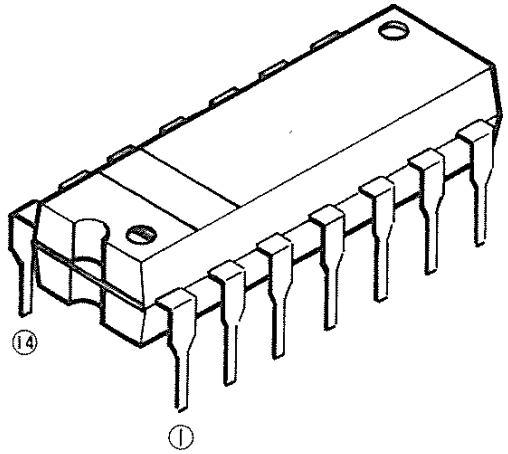

- **BLOCK & SCHEMATIC DIAGRAM**

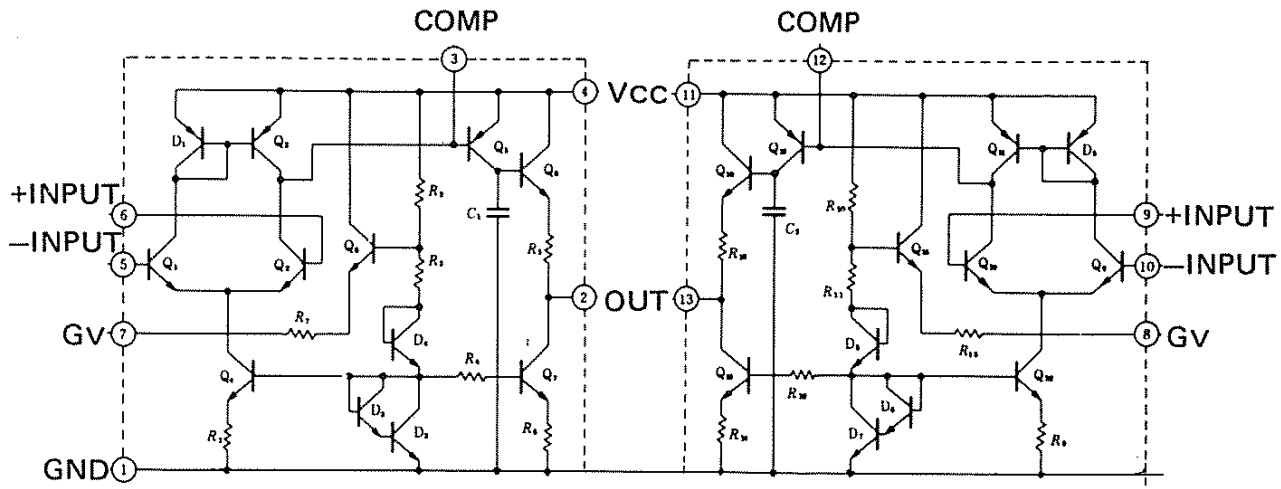

No.	Name	Description		No.	Name	Description	
1	GND	Ground		14	NC	Non-connection	
2	OUT	Output		13	OUT	Output	
3	COMP	Capacitors (for phase compensation)		12	COMP	Capacitors (for phase compensation)	
4	Vcc	+DC voltage supply		11	Vcc	+DC voltage supply	
5	– INPUT	Signal input	1ch	10	– INPUT	Signal input	2 ch
6	+ INPUT	Non-inverting input		9	+ INPUT	Non-inverting input	
7	Gv	Gv determination		8	Gv	Gv determination	

• CIRCUIT ILLUSTRATION

MODEL **CS-30**

CIRCUIT BOARD . . **VCA**

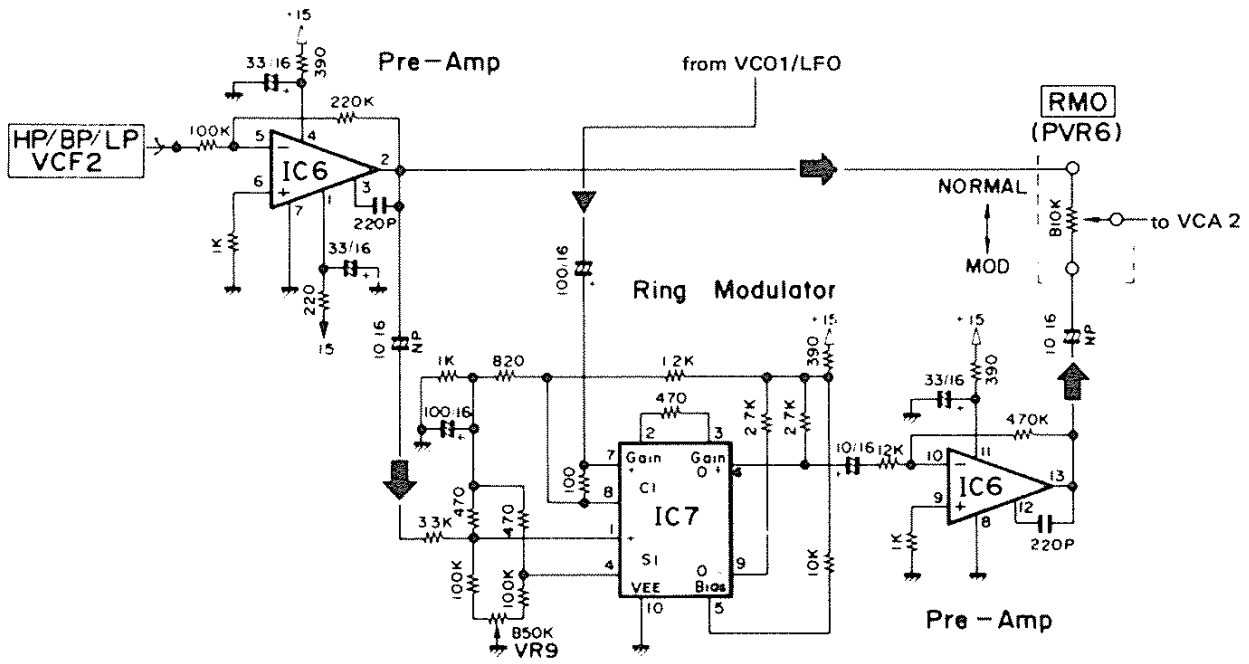

HA1457W

Part No.	iG02620
made by	HITACHI

- **FUNCTION**

Low Noise Audio Pre-amplifier

- **OUTLINE DRAWING**

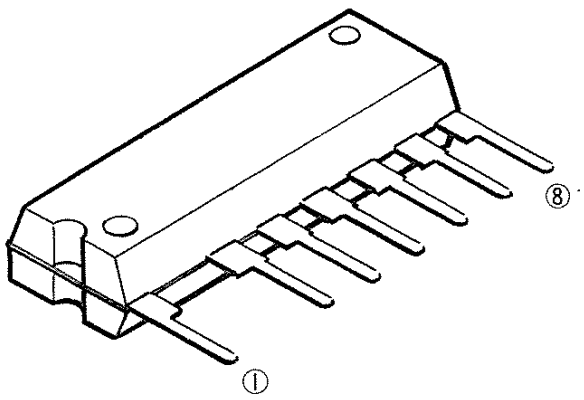

- **BLOCK & SCHEMATIC DIAGRAM**

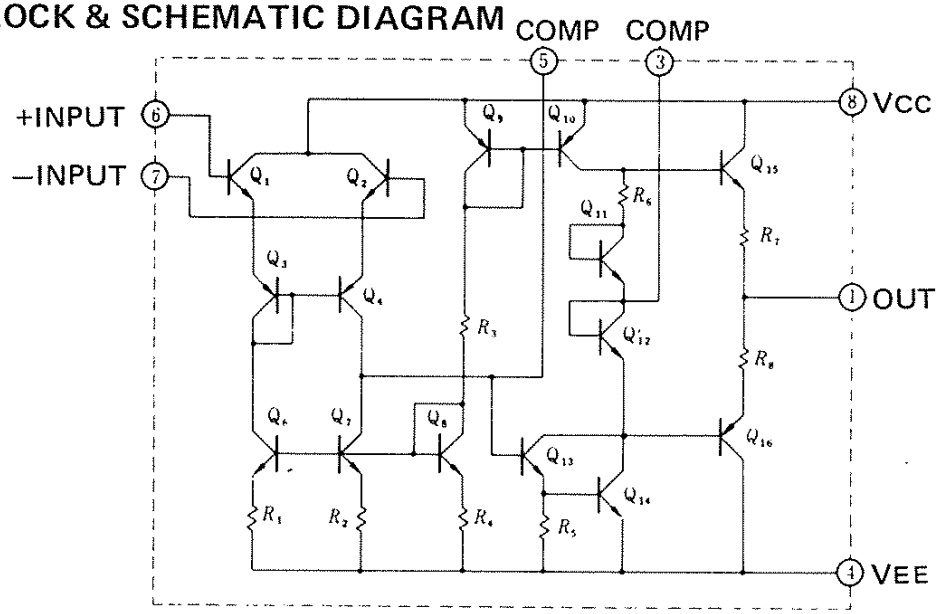

No.	Name	Description	No.	Name	Description
1	OUT	Output			
2	NC	Non-connection			
3	COMP	Capacitors (for phase compensation)			
4	VEE	−DC voltage supply			
5	COMP	Capacitors (for phase compensation)			
6	+ INPUT	Non-inverting input			
7	− INPUT	Inverting input			
8	Vcc	+DC voltage supply			

CIRCUIT ILLUSTRATION

MODEL **PM-2000**

CIRCUIT BOARD . **INPUT MODULE**

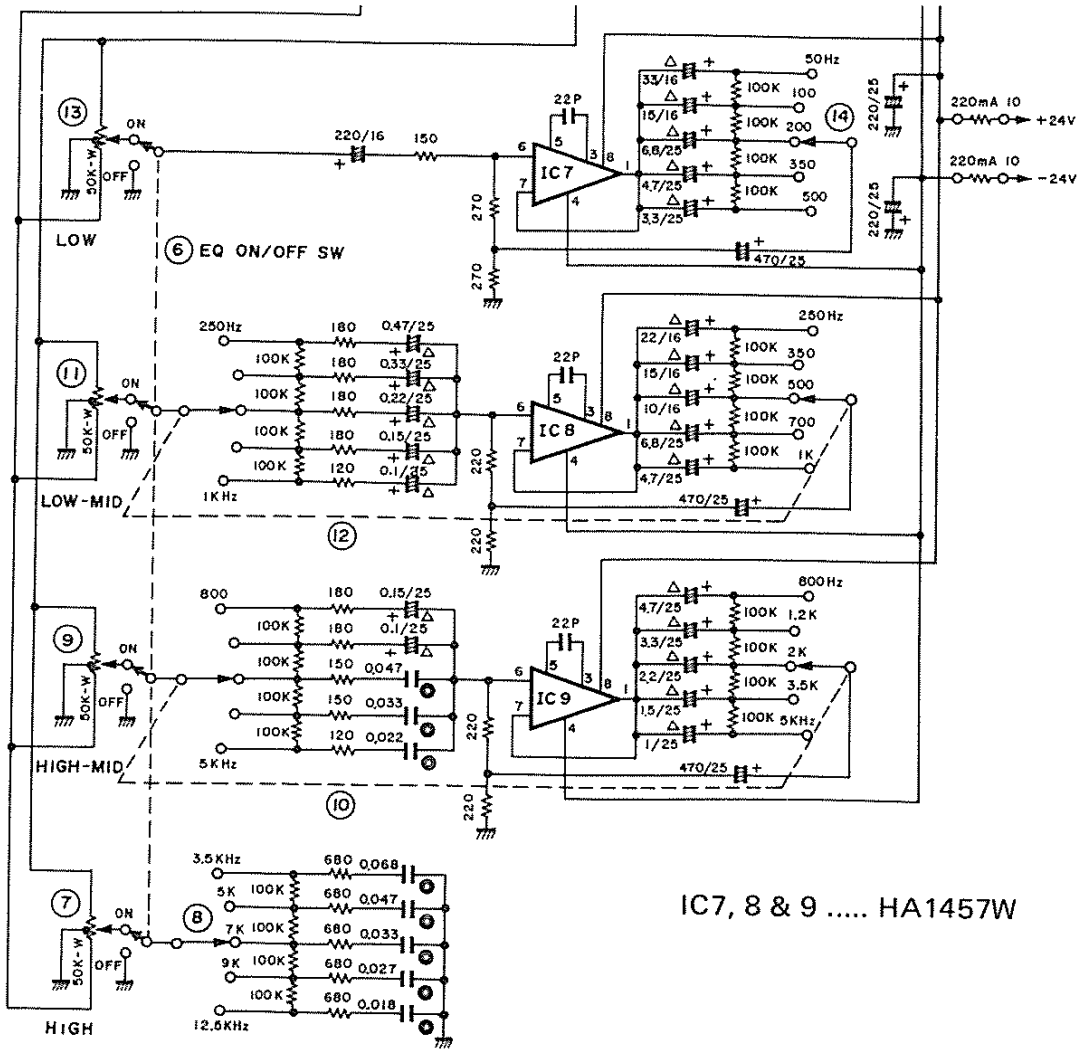

IC7, 8 & 9 ..... HA1457W

TA7136P

Part No.	iG00122 iG00133 (low noise)
made by	TOSHIBA

- **FUNCTION**

Audio Pre-amplifier

- **OUTLINE DRAWING**

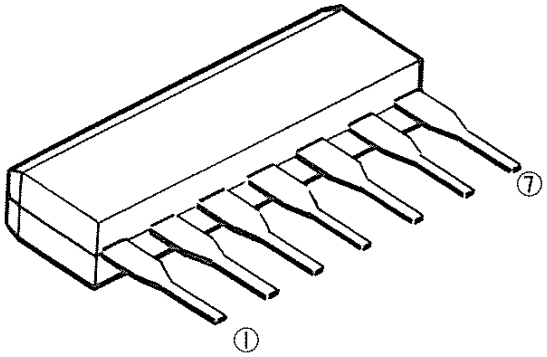

- **BLOCK & SCHEMATIC DIAGRAM**

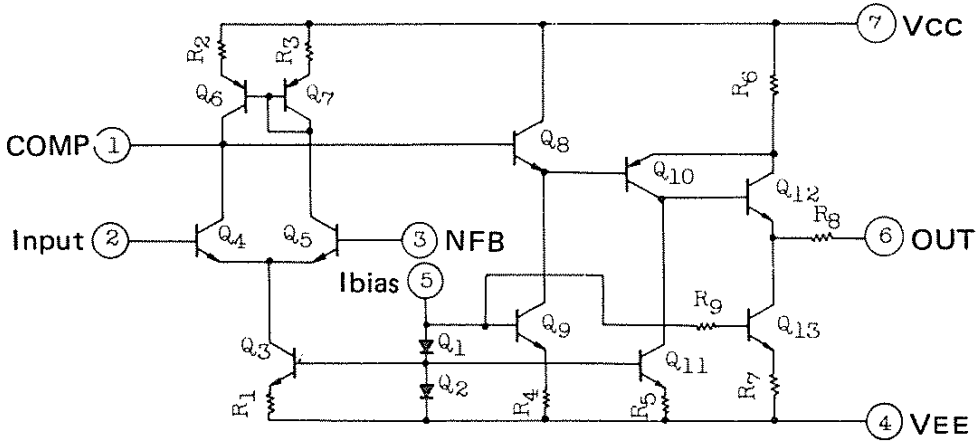

No.	Name	Description	No.	Name	Description
1	COMP	Phase compensation			
2	Input	Signal input			
3	NFB	Negative feed back			
4	VEE	−DC voltage supply			
5	Ibias	Determination of Bias current			
6	OUT	Output			
7	Vcc	+DC voltage supply			

• CIRCUIT ILLUSTRATION

MODEL EM-200

CIRCUIT BOARD . NA80407

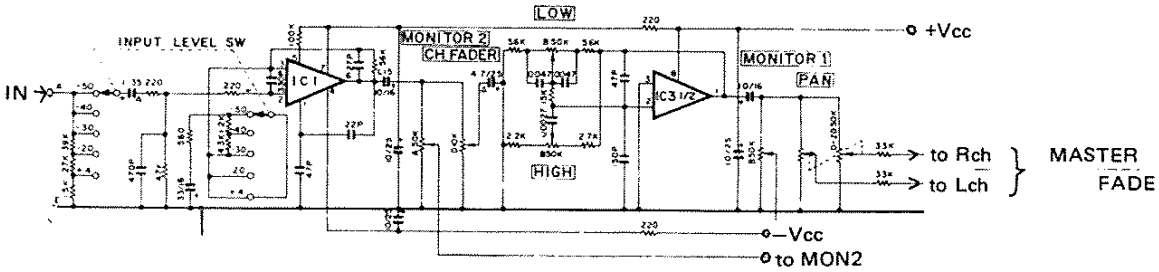

TA7202P

Part No.	iG02760
made by	TOSHIBA

• FUNCTION

Power Amplifier (Po = 6.5W)

• OUTLINE DRAWING

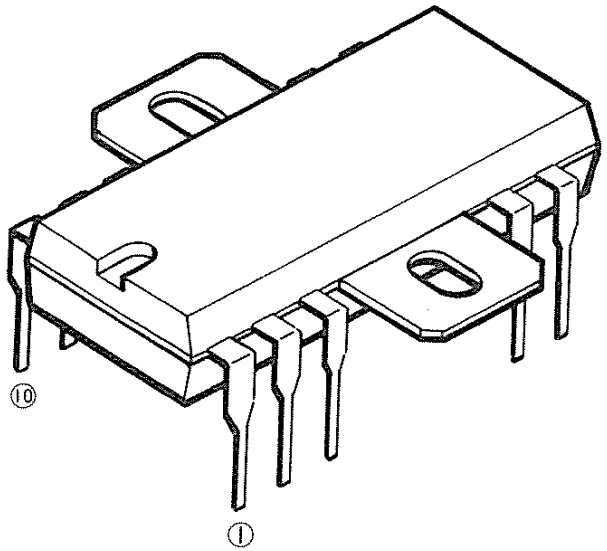

• BLOCK & SCHEMATIC DIAGRAM

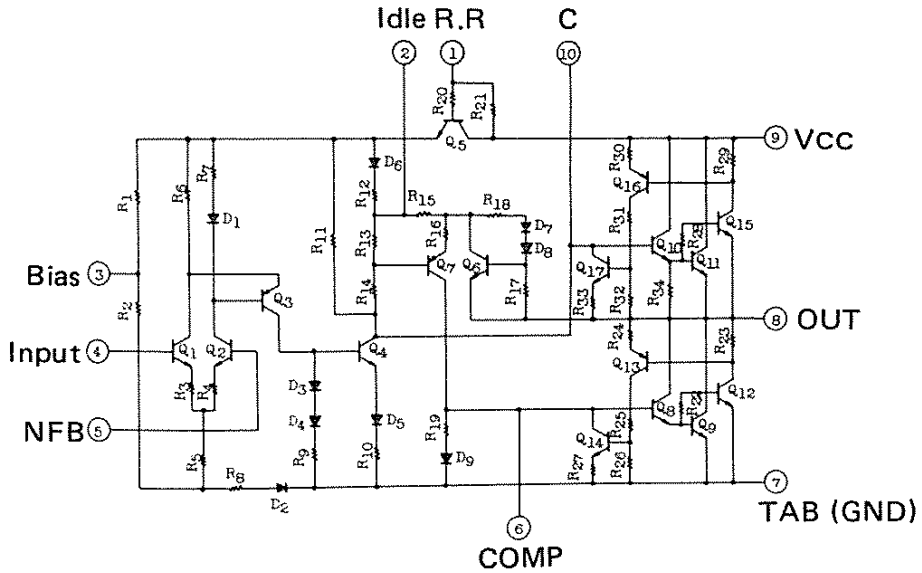

No.	Name	Description	No.	Name	Description
1	R. R.	Ripple Reduction	10	C	Capacitor (frecuency response)
2	Idle	Determination of idle current	9	Vcc	+DC voltage supply
3	BIAS	Bias voltage of input	8	OUT	Output
4	Input	Signal input	7	GND	Ground
5	NFB	Negative Feedback	6	COMP	Phase compensation

• CIRCUIT ILLUSTRATION

MODEL PM-2000

CIRCUIT BOARD . . PHONE AMP

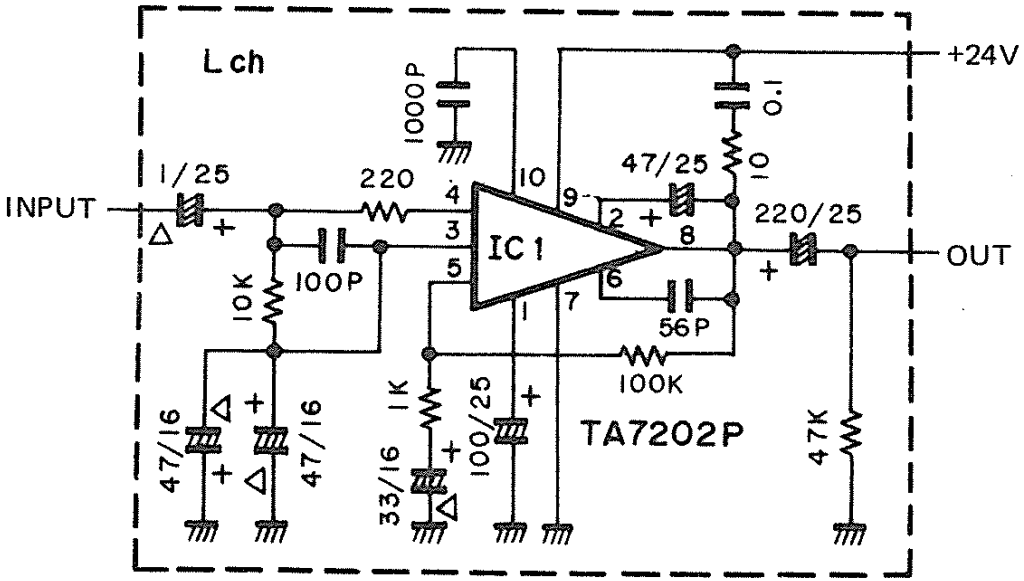

TA7203P

Part No.	iG00134
made by	TOSHIBA

● FUNCTION

Power Amplifier (Po = 2W x 2)

● OUTLINE DRAWING

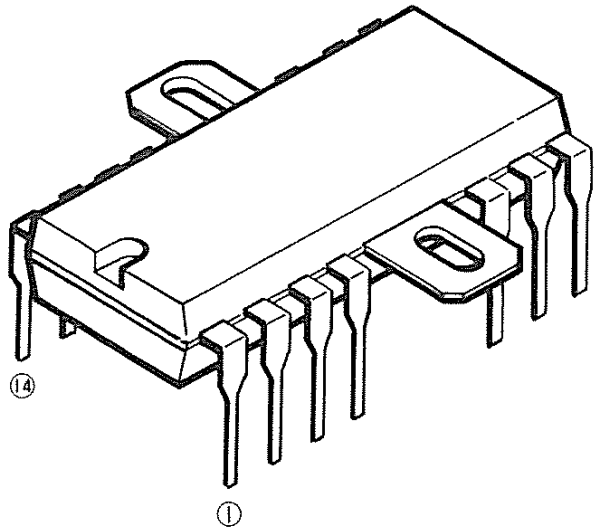

● BLOCK & SCHEMATIC DIAGRAM

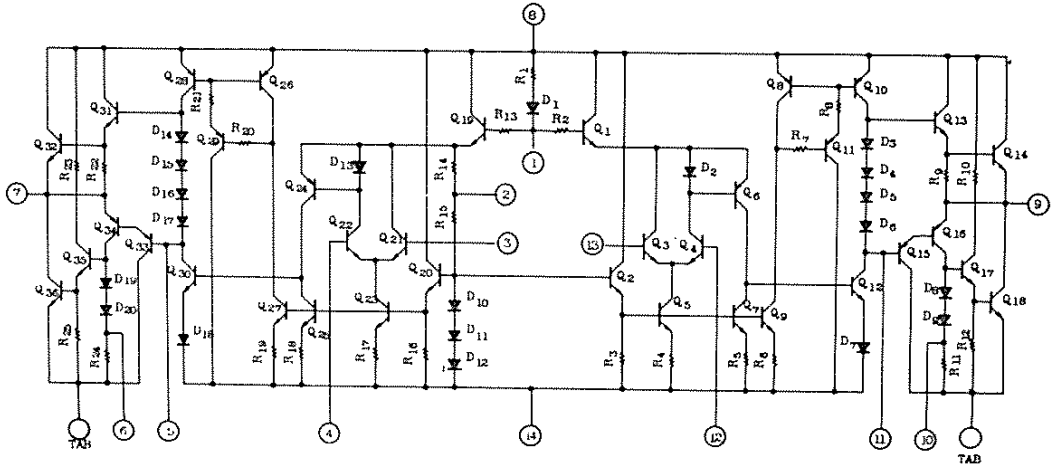

No.	Name	Description	No.	Name	Description
1	R. F	Ripple Reduction	14	GND	Ground
2	Bias	Bias voltage of input	13	Input 2	Signal input 2
3	Input 1	Signal input 1	12	NFB	Negative Feedback
4	NFB	Negative Feedback	11	COMP	Phase compensation
5	COMP	Phase compensation	10	C	Capacitor
6	C	Capacitor	9	Output 2	OUTPUT 2
7	Output 1	Output 1	8	Vcc	+DC voltage supply

● CIRCUIT ILLUSTRATION

MODEL **PM170**

CIRCUIT BOARD . . **HP**

NA80158(HP)

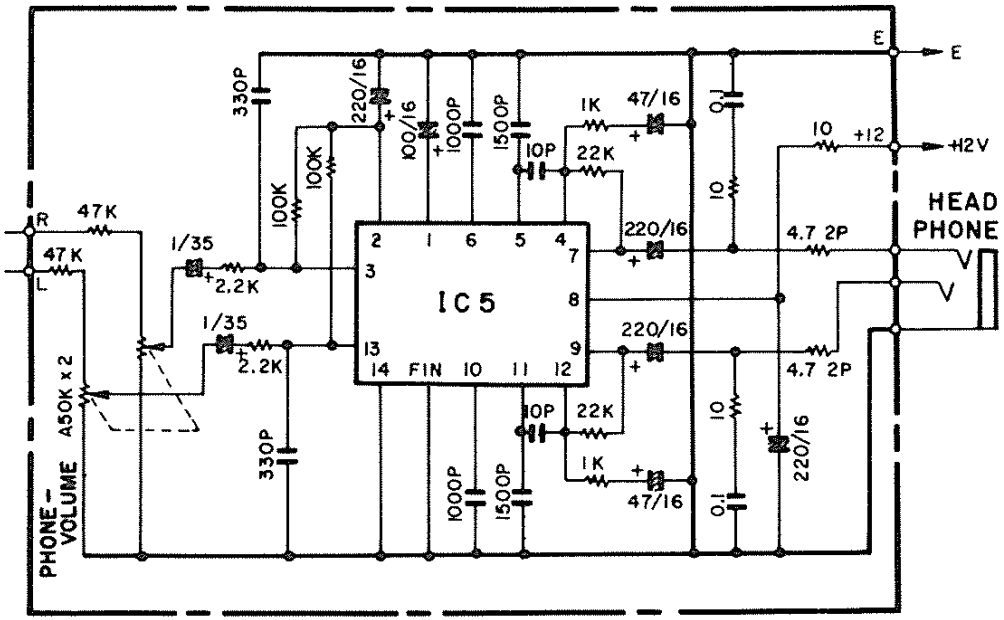

TA7317P

Part No.	iG03480
made by	TOSHIBA

- **FUNCTION**

Relay Driver

- **OUTLINE DRAWING**

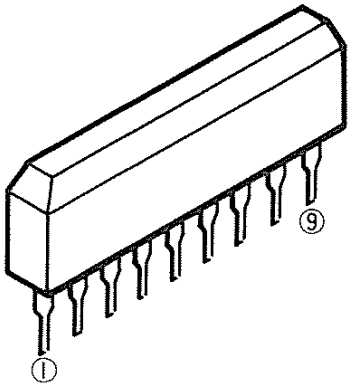

- **BLOCK & SCHEMATIC DIAGRAM**

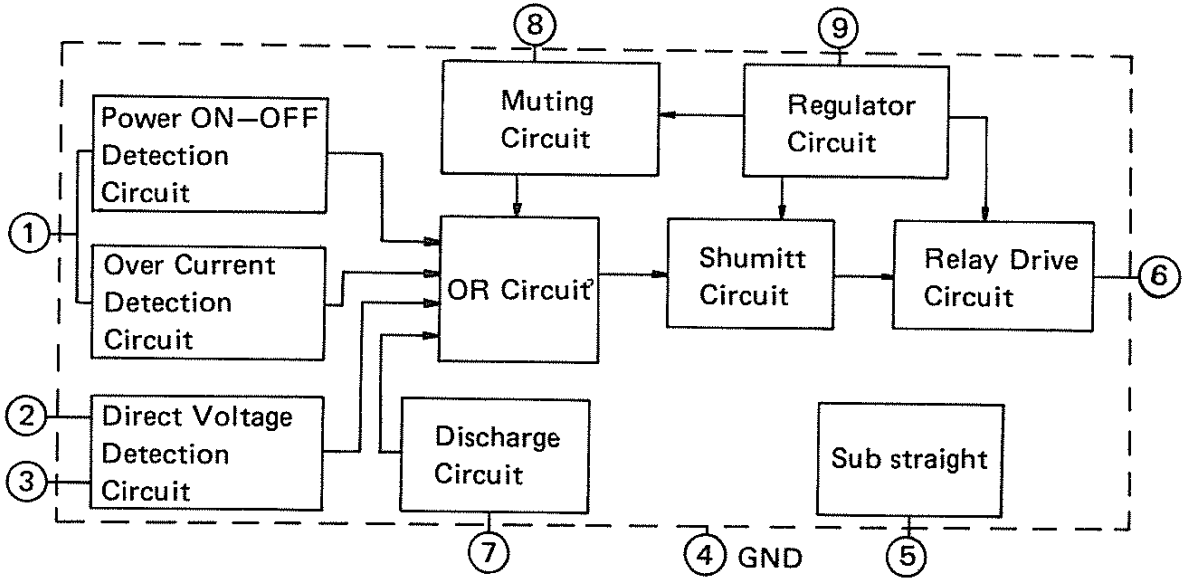

No.	Name	Description	No.	Name	Description
1		Over current Detection			
2	±VDC	±Direct Voltage Detection			
3	±VDC	"			
4	GND	Ground			
5		Sub Straight			
6	Out	Relay Drive Output			
7		Discharge			
8		Muting			
9	VCC	+DC voltage supply			

• CIRCUIT ILLUSTRATION

MODEL **Q1027**

CIRCUIT BOARD .. **HK**

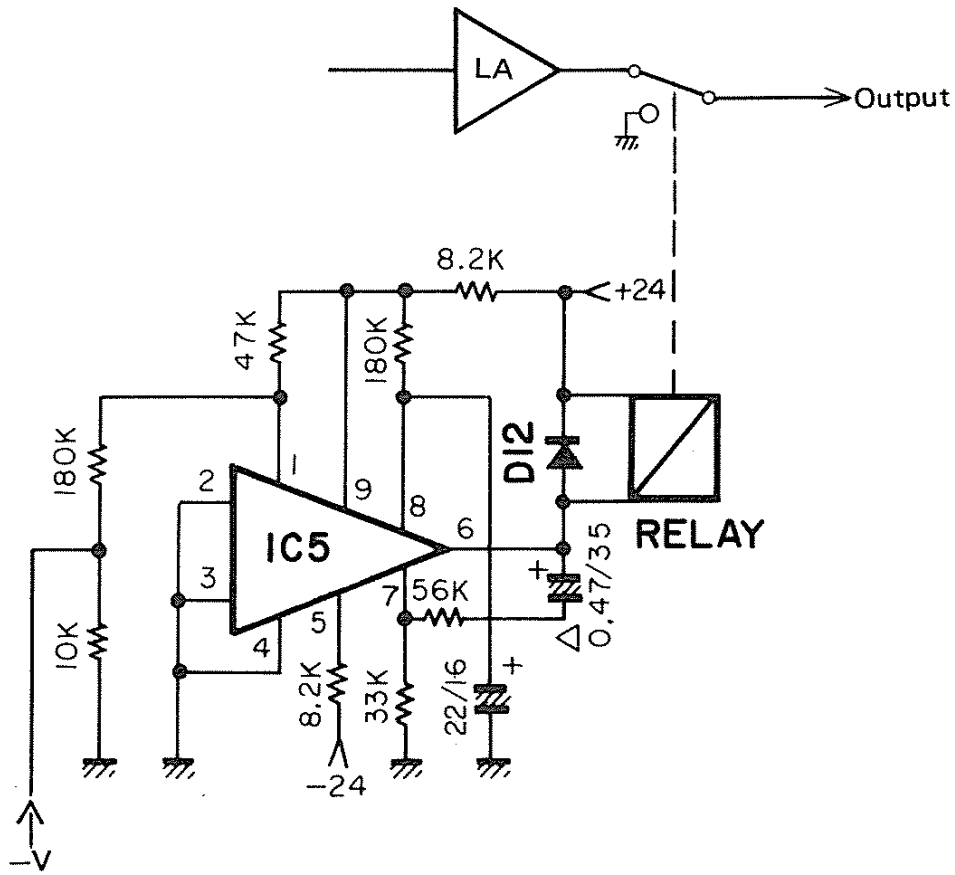

IC5 ..... TA7317P

TA7322P

Part No.	iG03990
made by	TOSHIBA

• FUNCTION

Low Noise Audio Pre-amplifier

• OUTLINE DRAWING

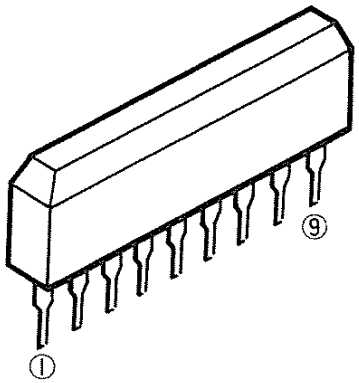

• BLOCK & SCHEMATIC DIAGRAM

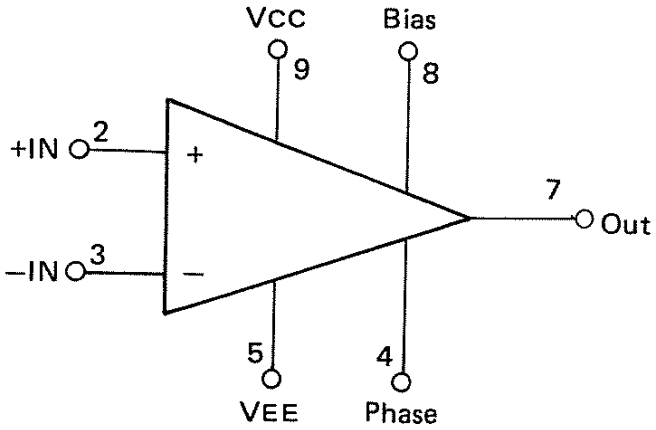

No.	Name	Description	No.	Name	Description
1		Phase compensation			
2	+IN	Non-Inverting input			
3	−IN	Inverting input			
4	Phase	Phase compensation			
5	V EE	−DC voltage supply			
6	NC	Non connection			
7	Out	Output			
8	Bias	Bias voltage supply			
9	V CC	+DC voltage supply			

• CIRCUIT ILLUSTRATION

MODEL **Q1027**

CIRCUIT BOARD .. **HK**

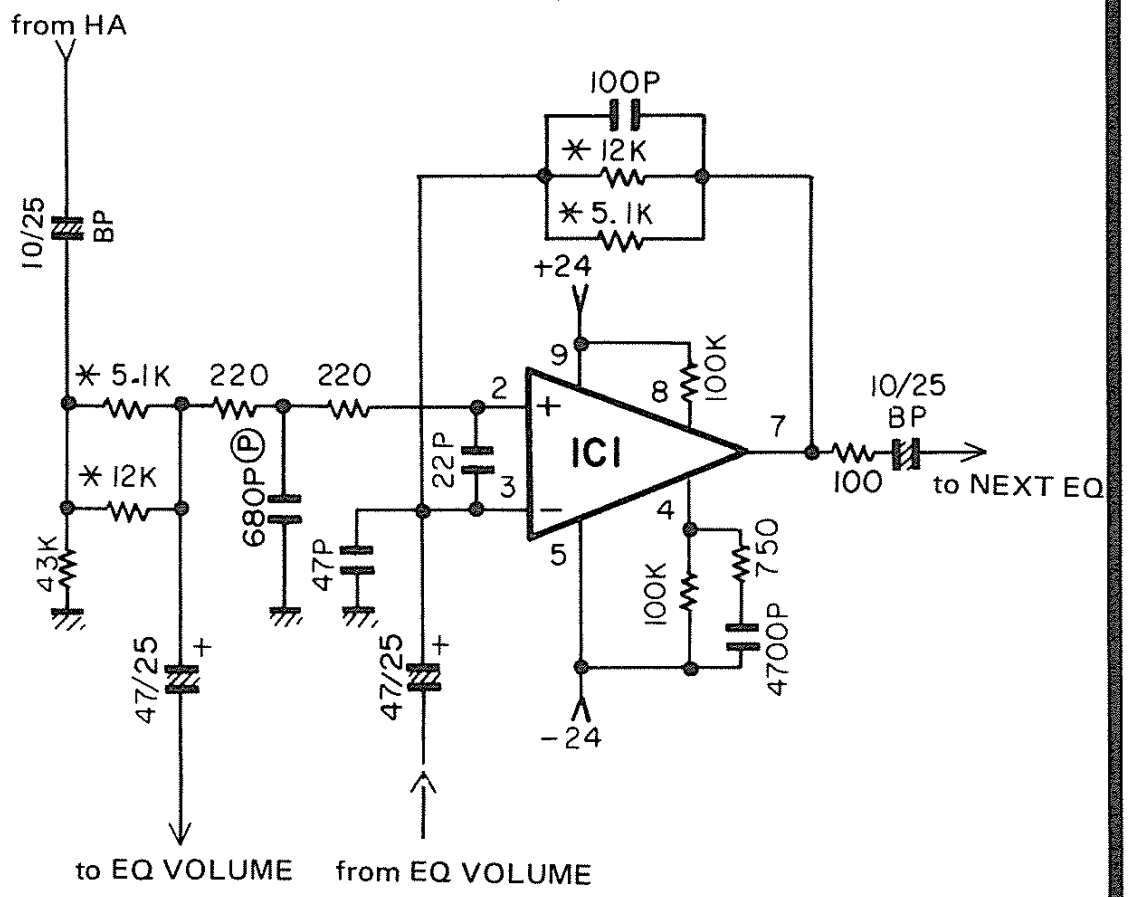

IC1 ..... TA7322P

TA 7084AM

Part No.	iG03220
made by	TOSHIBA

• FUNCTION

Positive Voltage Regulator

• OUTLINE DRAWING

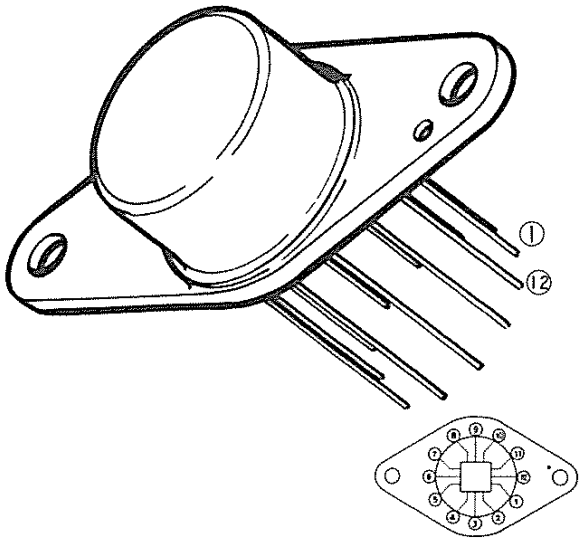

[Bottom View]

• BLOCK & SCHEMATIC DIAGRAM

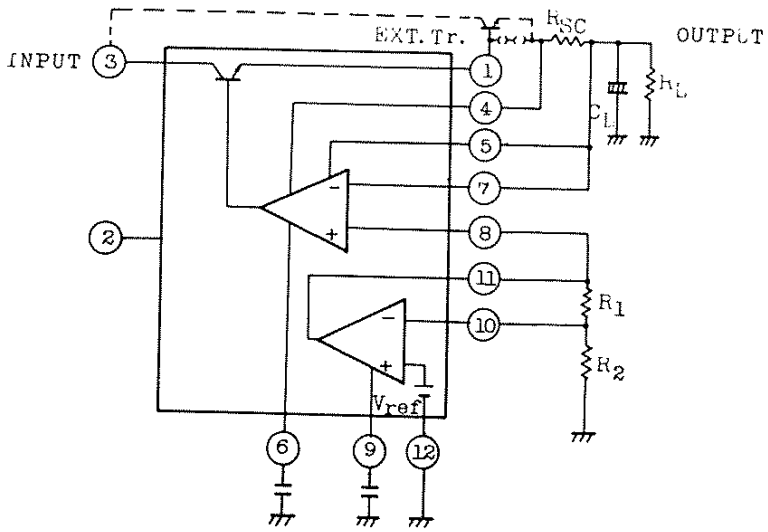

No.	Name	Description	No.	Name	Description
1	Output	+DC voltage output	12	GND	Ground (Case)
2		Shut-Down Control	11		DC Shift Output
3	Input	+ Supply Voltage input	10		DC Shift Sence
4		Current Limit	9		Noise Filter
5		Current Limit	8		Output Reference
6	COM	Phase compensation	7		Output Sence

• CIRCUIT ILLUSTRATION

MODEL PM-2000

CIRCUIT BOARD . . POWER SUPPLY

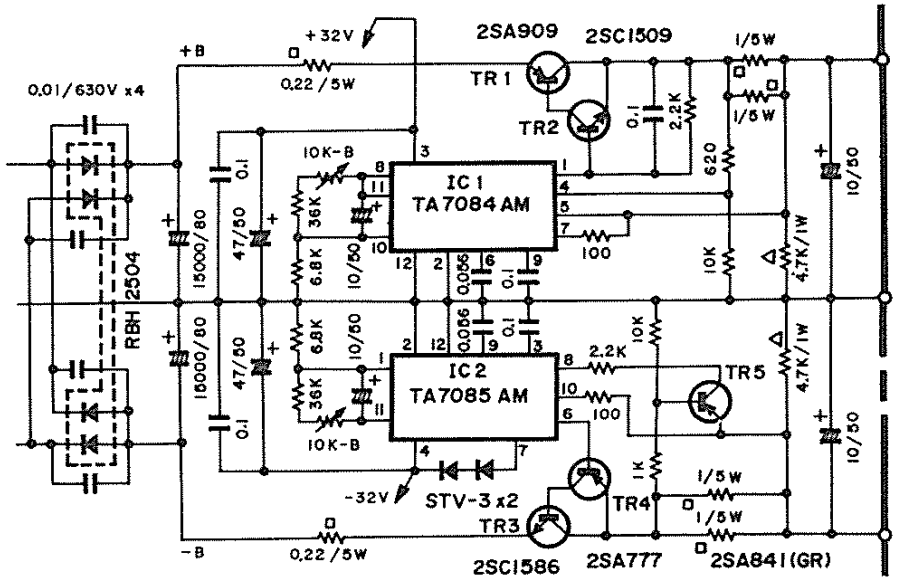

TA7085AM

Part No.	iG03230
made by	TOSHIBA

● FUNCTION

Negative Voltage Regulator

● OUTLINE DRAWING

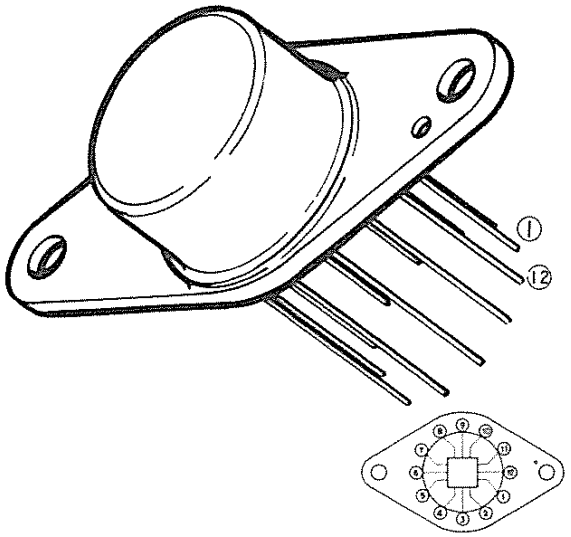

[Bottom View]

● BLOCK & SCHEMATIC DIAGRAM

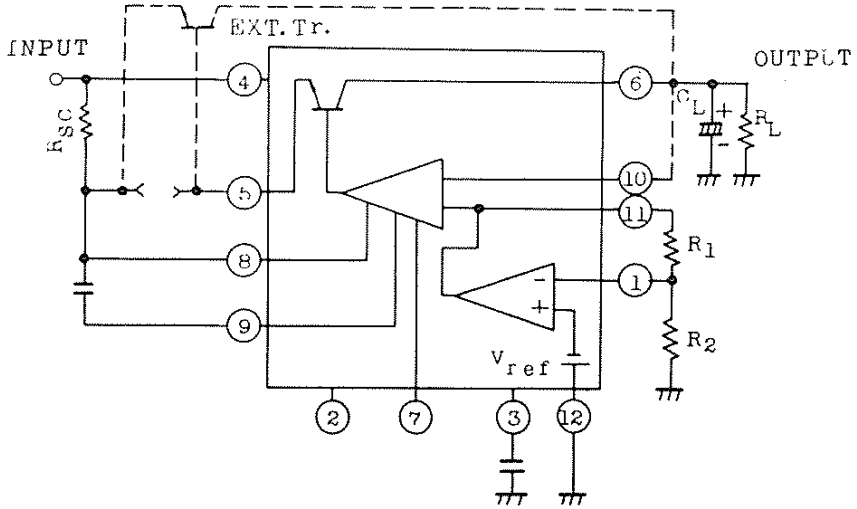

No.	Name	Description	No.	Name	Description
1		DC Shift sence	12	GND	Ground (Case)
2		Shut-Down control	11		DC Shift Output
3		Noise Filter	10		Output Sence
4	Input	— supply voltage input	9	COMP(1)	Phase compensation(1)
5	Un Reg IN	Un-regulated input	8	CL	Current Limit
6	Output	—DC voltage output	7	COMP(2)	Phase compensation (2)

• CIRCUIT ILLUSTRATION

MODEL PM-2000

CIRCUIT BOARD . .POWER SUPPLY

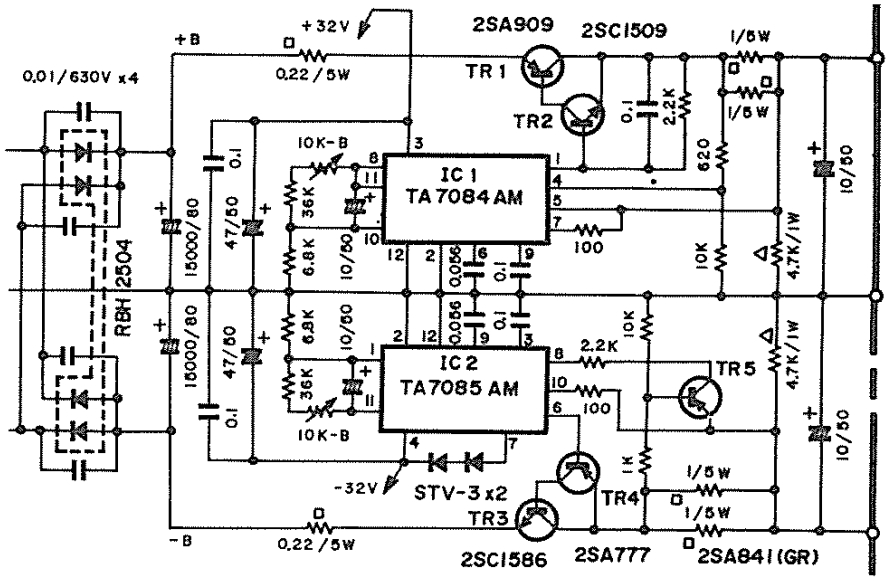

TA7179P

Part No.	iG03201
made by	TOSHIBA

• FUNCTION

Dual ± 15V Tracking Regulator

• OUTLINE DRAWING

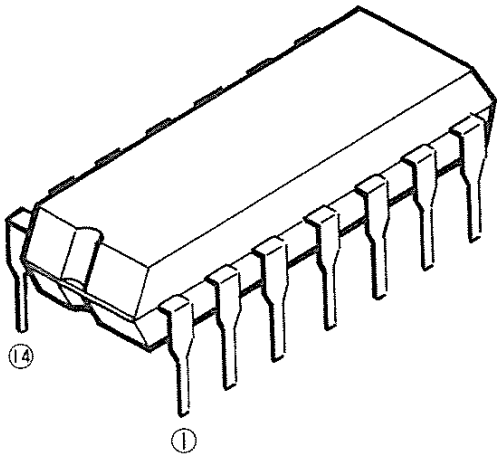

• BLOCK & SCHEMATIC DIAGRAM

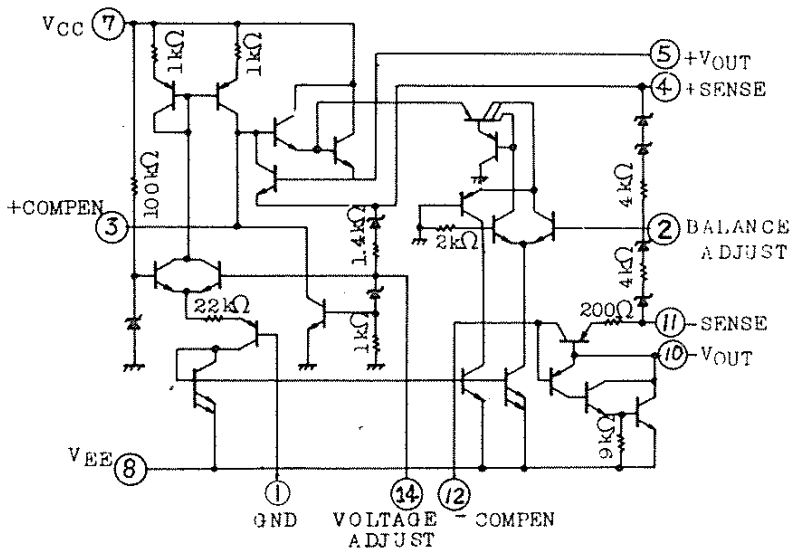

No.	Name	Description	No.	Name	Description
1	GND	Ground	14	ADJ	Voltage adjust
2	BAL	Balance adjust	13	NC	Non connection
3	+COMP	+ Compensation	12	–COMP	– Compensation
4	+SENSE	+ Sense	11	–SENSE	– Sense
5	+V out	+DC voltage output	10	–Vout	–DC voltage output
6	NC	Non-connection	9	NC	Non-connection
7	Vcc	+ Voltage input	8	VEE	– Voltage input

• CIRCUIT ILLUSTRATION

MODEL **CS-5**

CIRCUIT BOARD . . **REG**

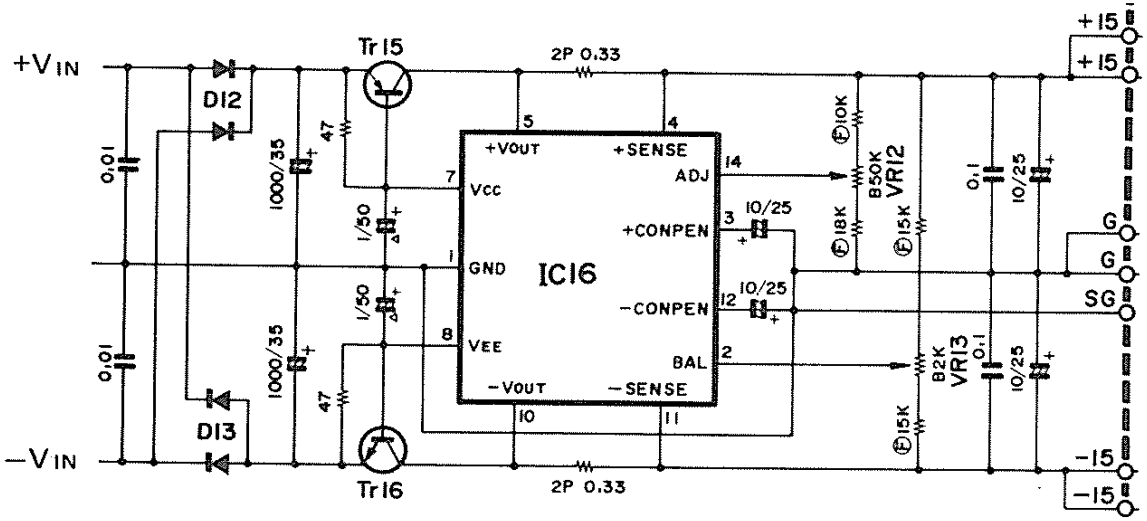

MN3001

Part No.	iG00165
made by	MATSUSHITA

• FUNCTION

512 stage BBDx2

• OUTLINE DRAWING

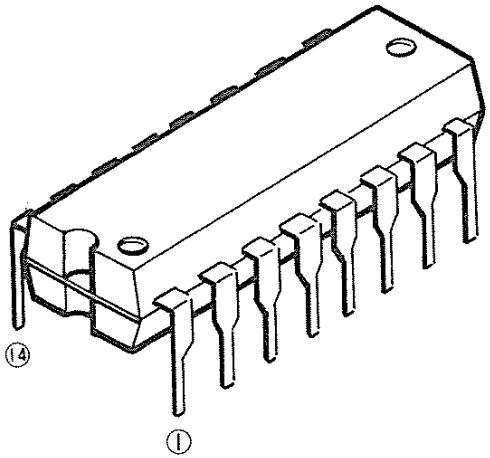

• BLOCK & SCHEMATIC DIAGRAM

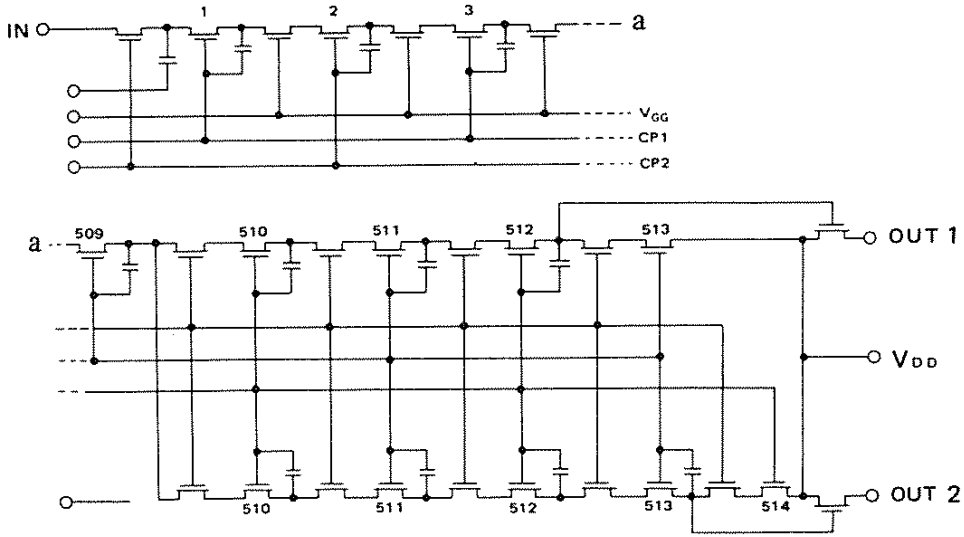

No.	Name	Description	No.	Name	Description
1	V_{BB}	+5V Backgate Bias voltage	14	OUT_2(A)	Out put 2 chA
2	CP_1(A)	Control Clock 1 chA	13	OUT_1(A)	Output 1 〃
3	IN(A)	Signal Input 〃	12	CP_2(A)	Control Clock 2 〃
4	V_{GG}	−14V DC voltage supply	11	V_{DD}	−15V DC voltage supply
5	IN(B)	Signal Input chB	10	CP_2 (B)	Control Clock 2 chB
6	CP_1(B)	Control Clock 1 〃	9	OUT_1(B)	Output 1 〃
7	GND	Ground	8	OUT_2(B)	Output 2 〃

• CIRCUIT ILLUSTRATION

MODEL **CS-80**

CIRCUIT BOARD . . **OE2**

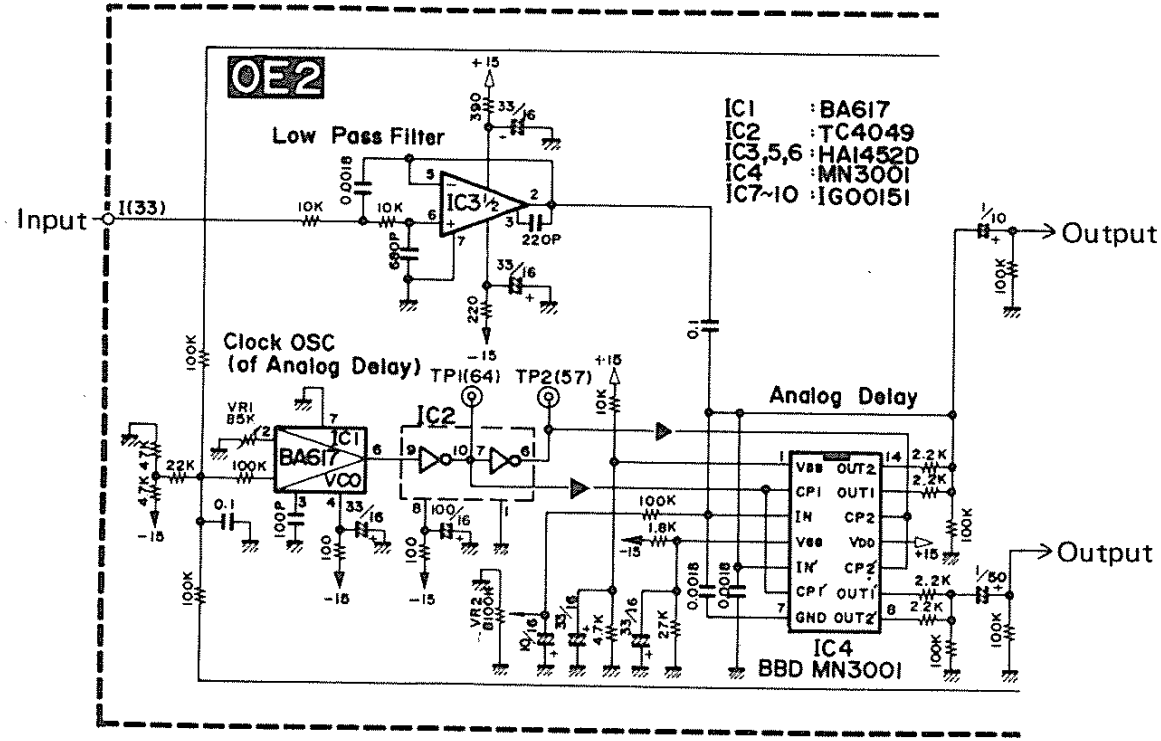

MN3004

Part No.	iG02540
made by	MATSUSHITA

• FUNCTION

Low Noise 512 stage BBD

• OUTLINE DRAWING

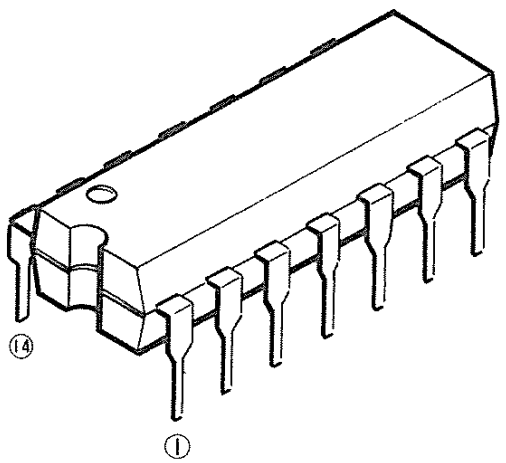

• BLOCK & SCHEMATIC DIAGRAM

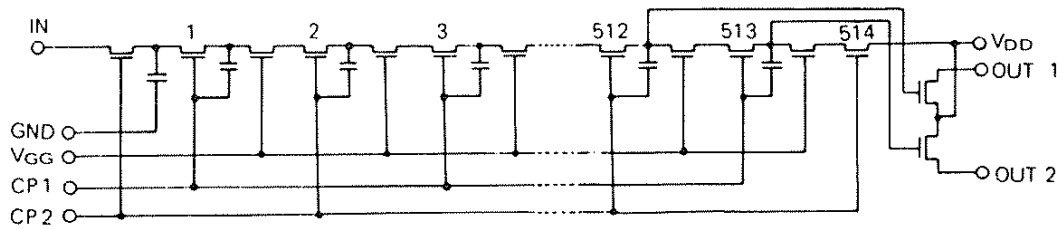

No.	Name	Description	No.	Name	Description
1	GND	Ground	14	OUT 2	Output 2
2	CP_1	Control Clock 1	13	OUT 1	Output 1
3	IN	Signal input	12	CP2	Control Clock 2
4	VGG	−14V DC voltage supply	11	VDD	−15V DC voltage supply
5	NC	Non-connection	10	NC	Non-connection
6	NC		9	NC	
7	NC		8	NC	

• CIRCUIT ILLUSTRATION

MODEL **SS-30**

CIRCUIT BOARD . . **OR**

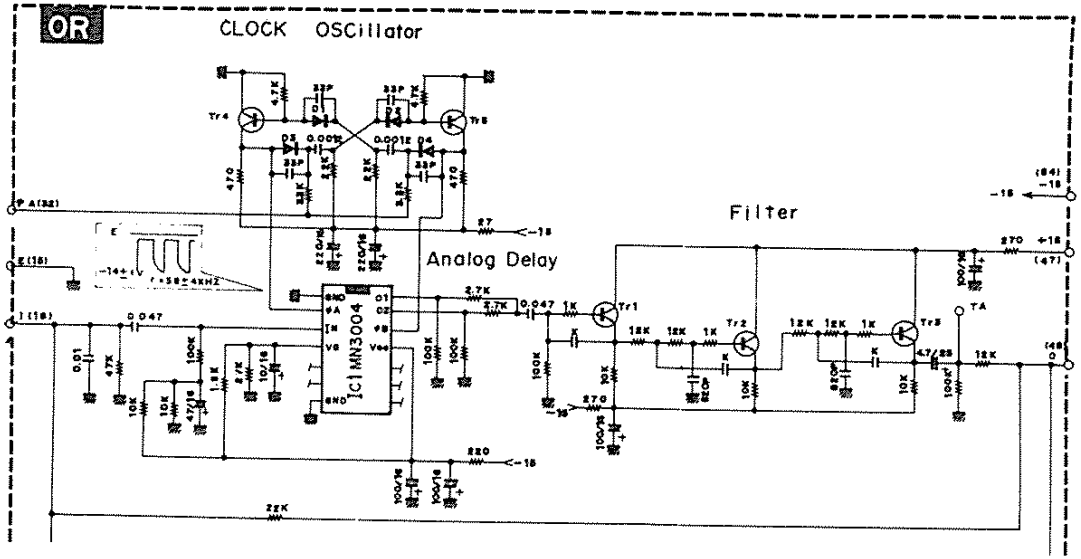

MN3005

Part No.	iG03120
made by	MATSUSHITA

● FUNCTION

4096 stage BBD

● OUTLINE DRAWING

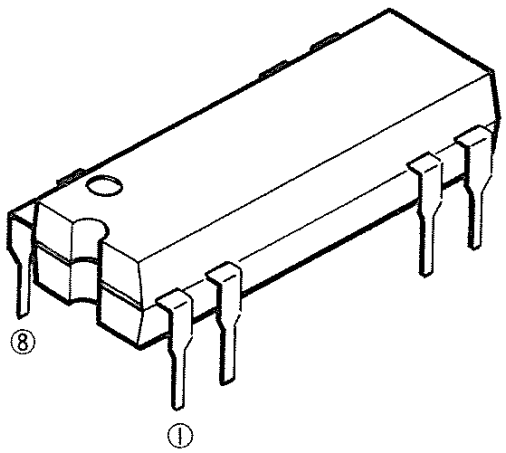

● BLOCK & SCHEMATIC DIAGRAM

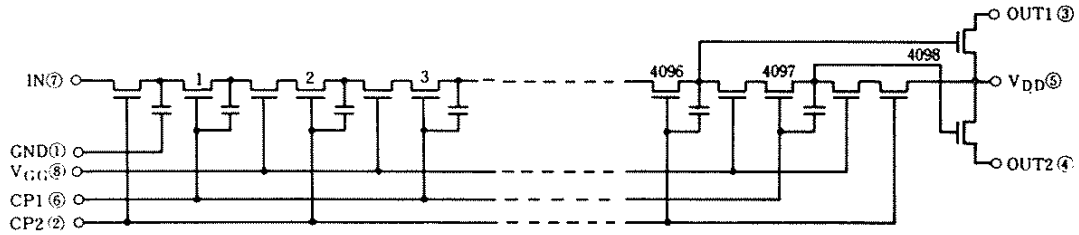

No.	Name	Description	No.	Name	Description
1	GND	Ground	8	VGG	−14V DC voltage supply
2	CP_2	Control Clock 2	7	IN	Signal Input
3	OUT_2	Output $_2$	6	CP_1	Control Clock
4	OUT_1	Output $_1$	5	VDD	−15V DC voltage supply

• CIRCUIT ILLUSTRATION

MODEL **E1010**

CIRCUIT BOARD . . **BD**

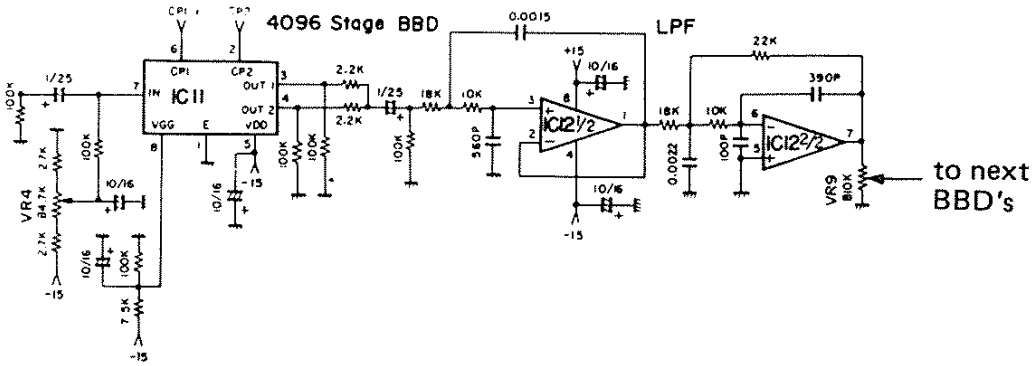

IC11 ..... MN3005

MN3006

Part No.	iG02810
made by	MATSUSHITA

● FUNCTION

128 stage BBD

● OUTLINE DRAWING

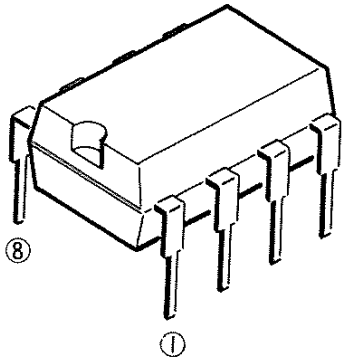

● BLOCK & SCHEMATIC DIAGRAM

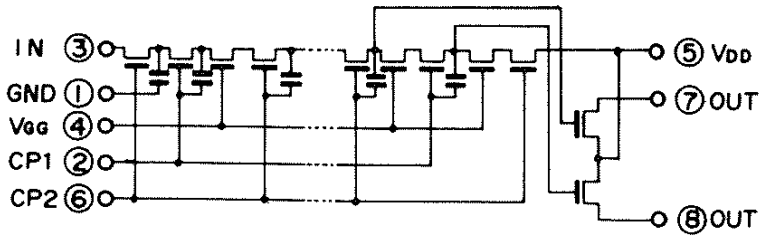

No.	Name	Description	No.	Name	Description
1	GND	Ground 0V	8	OUT2	Output 2
2	CP1	Control Clock 1	7	OUT1	Output 1
3	IN	Signal input	6	CP2	Control Clock 2
4	VGG	−14V DC voltage supply	5	VDD	−15V DC voltage supply

• CIRCUIT ILLUSTRATION

MODEL **SK10**

CIRCUIT BOARD . . **ENS**

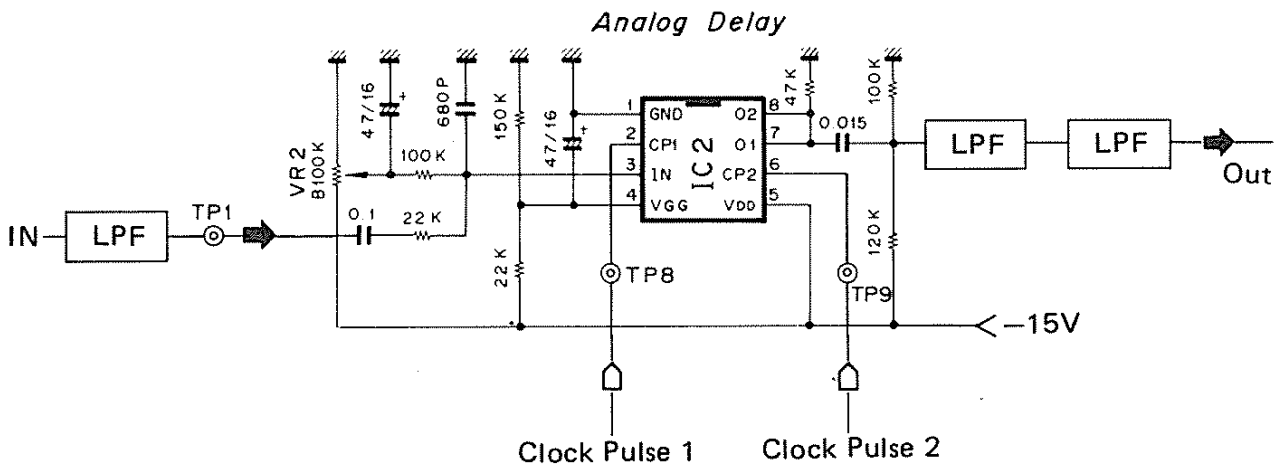

IC2 ..... MN3006

BA617

Part No.	iG00141
made by	R. ohm

- **FUNCTION**

Voltage Control Oscillator

- **OUTLINE DRAWING**

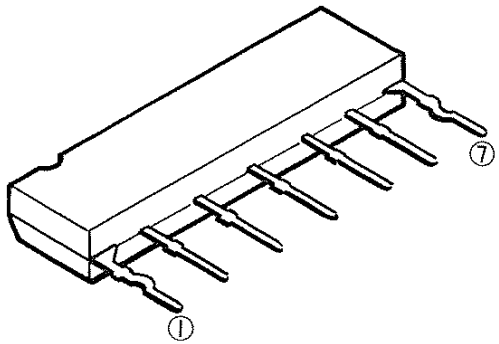

- **BLOCK & SCHEMATIC DIAGRAM**

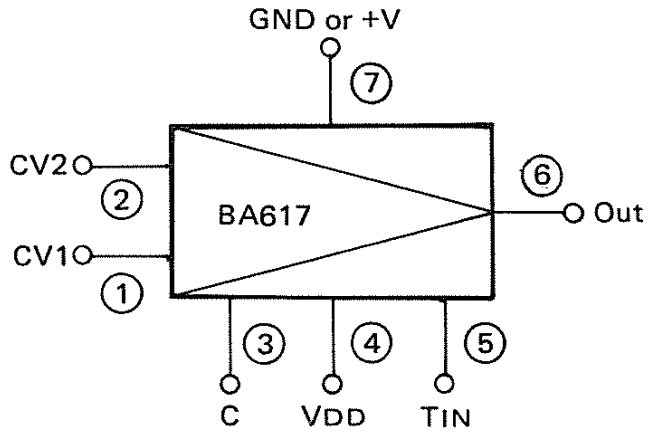

No.	Name	Description	No.	Name	Description
1	CV1	Control voltage 1			
2	CV2	" 2			
3	C	Capacitors (for frequency determine)			
4	VDD	—DC voltage supply			
5	TIN	Trigger pulse Input			
6	Out	Output			
7	GND	+DC voltage supply or GND			

• CIRCUIT ILLUSTRATION

MODEL **CS-40M**

CIRCUIT BOARD . . **SK**

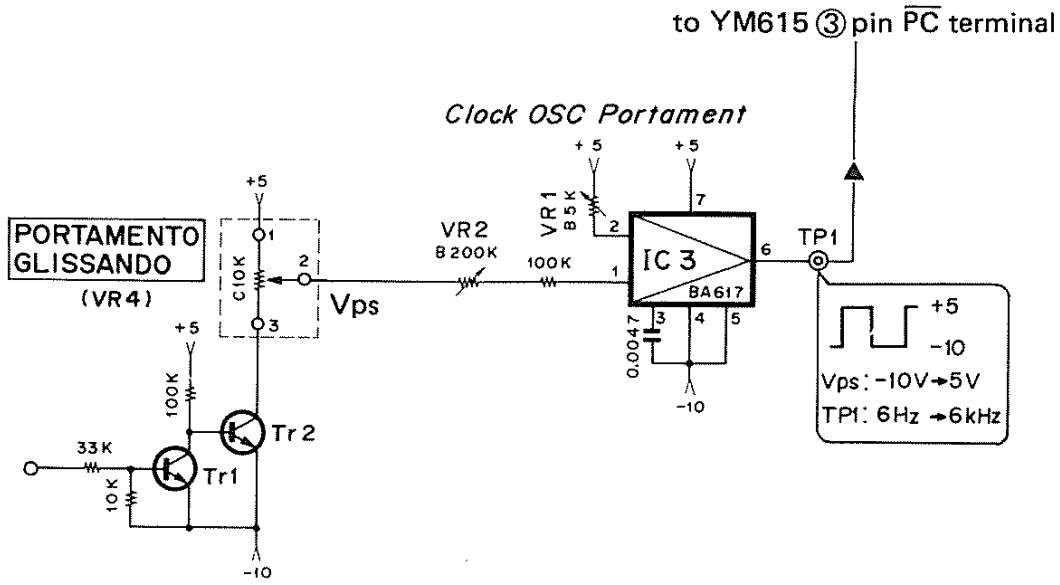

IC3 ..... BA617

BA634

Part No.	iG00160
made by	R. ohm

- **FUNCTION**

One Stage Frequency Divider

- **OUTLINE DRAWING**

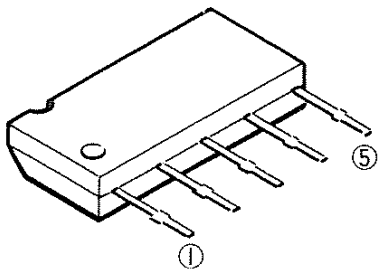

- **BLOCK & SCHEMATIC DIAGRAM**

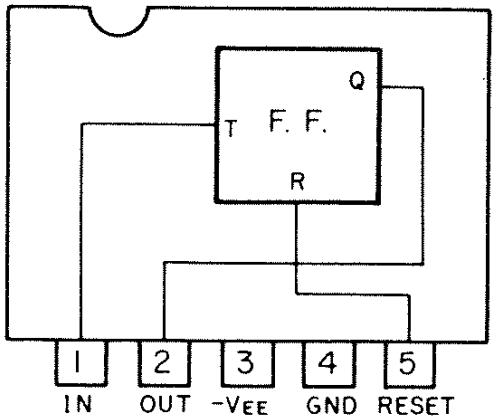

No.	Name	Description	No.	Name	Description
1	IN	Input			
2	Out	Output			
3	VEE	–DC voltage supply			
4	GND	Ground or +DC voltage supply			
5	R	Reset			

• CIRCUIT ILLUSTRATION

MODEL **CS-40M**

CIRCUIT BOARD . . **MOD**

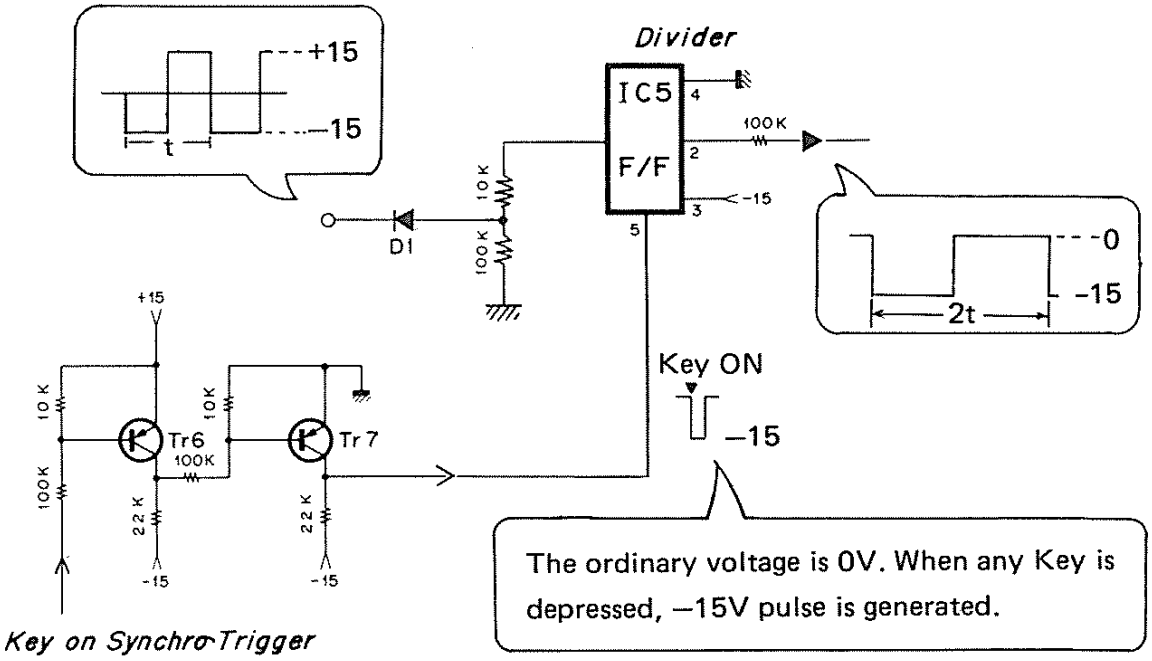

iG02600

Part No.	iG02600
made by	R. ohm

● FUNCTION

Voltage Control Amplifier

● OUTLINE DRAWING

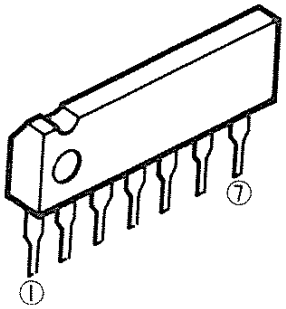

● BLOCK & SCHEMATIC DIAGRAM

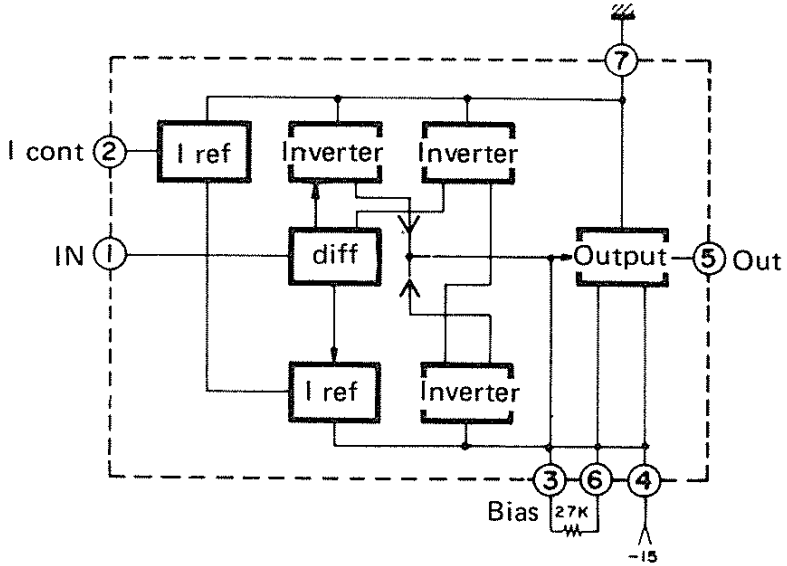

No.	Name	Description	No.	Name	Description
1	IN	Input			
2	Icont	Control voltage input			
3	Bias	Bias			
4	VEE	—DC voltage supply			
5	Out	Output			
6	Ein	Emitter follower input			
7	GND	Ground 0V			

• CIRCUIT ILLUSTRATION

MODEL **SK10**

CIRCUIT BOARD . . **CPB**

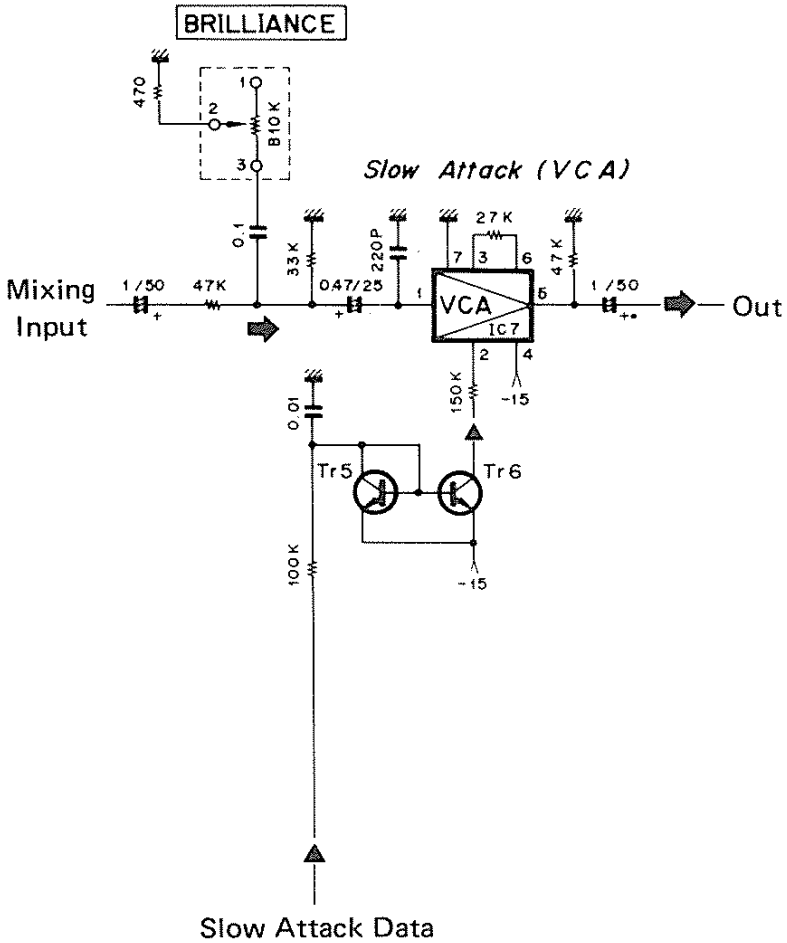

iG03290

Part No.	iG03290
made by	R.ohm

- **FUNCTION**

  BBD driver

- **OUTLINE DRAWING**

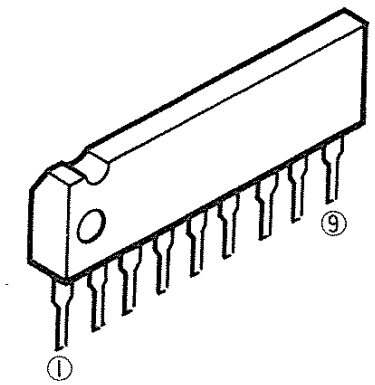

- **BLOCK & SCHEMATIC DIAGRAM**

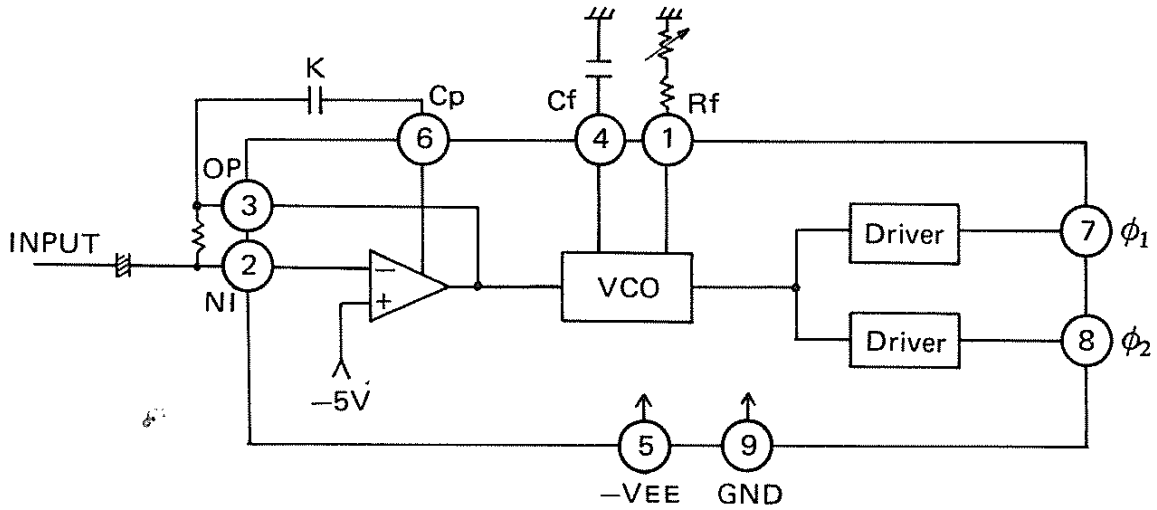

No.	Name	Description	No.	Name	Description
1	Rf	Resistor (for oscillation)			
2	−IN	Inverting Input			
3	OP	Op. amp Output			
4	Cf	Capacitors (for oscillation)			
5	V EE	−DC voltage supply			
6	Cp	Capacitors (for phase compensation)			
7	ϕ_1	BBD drive Output 1			
8	ϕ_2	BBD drive Output 2			
9	GND	Ground			

● CIRCUIT ILLUSTRATION

MODEL **SK10**

CIRCUIT BOARD .. **ENS**

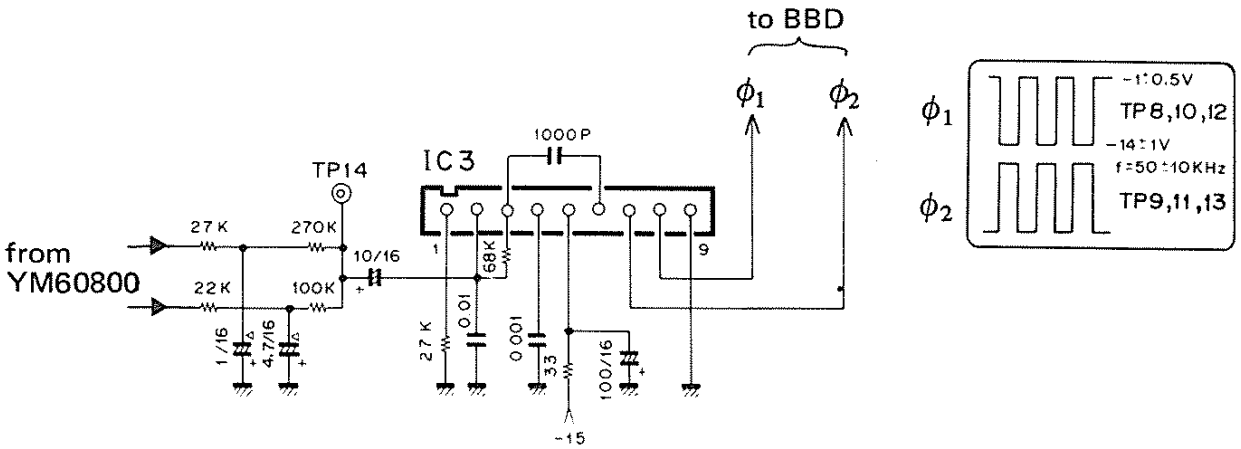

IC3 ..... iG03290

LB1405

Part No.	iG03140
made by	TOKYO SANYO

- **FUNCTION**

Level Meter's IC

- **OUTLINE DRAWING**

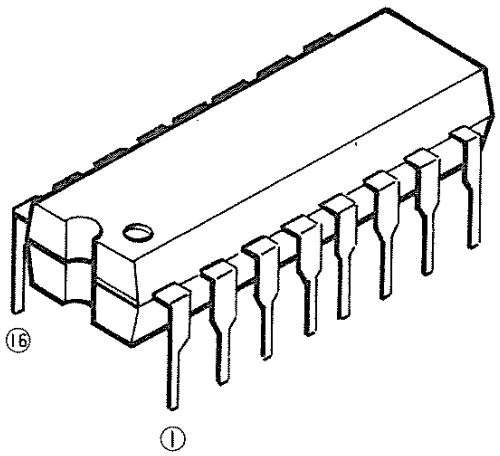

- **BLOCK & SCHEMATIC DIAGRAM**

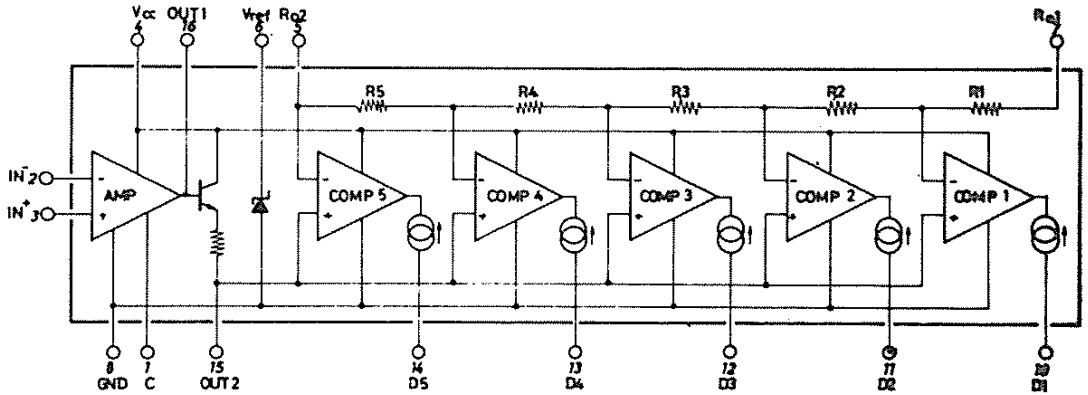

No.	Name	Description	No.	Name	Description
1	C	Phase Compensation	16	OUT 1	Phase Compensation
2	– IN	Inverting Input	15	OUT 2	DC Amp Output
3	+ IN	Non-Inverting Input	14	D_5	Comparators Output
4	Vcc	DC voltage supply	13	D_4	
5	R_{02}		12	D_3	
6	Vref	Reference Voltage	11	D_2	
7	R_{01}		10	D_1	
8	GND	Ground	9	NC	Non-connection

• CIRCUIT ILLUSTRATION

MODEL **E1010**

CIRCUIT BOARD . . **FP**

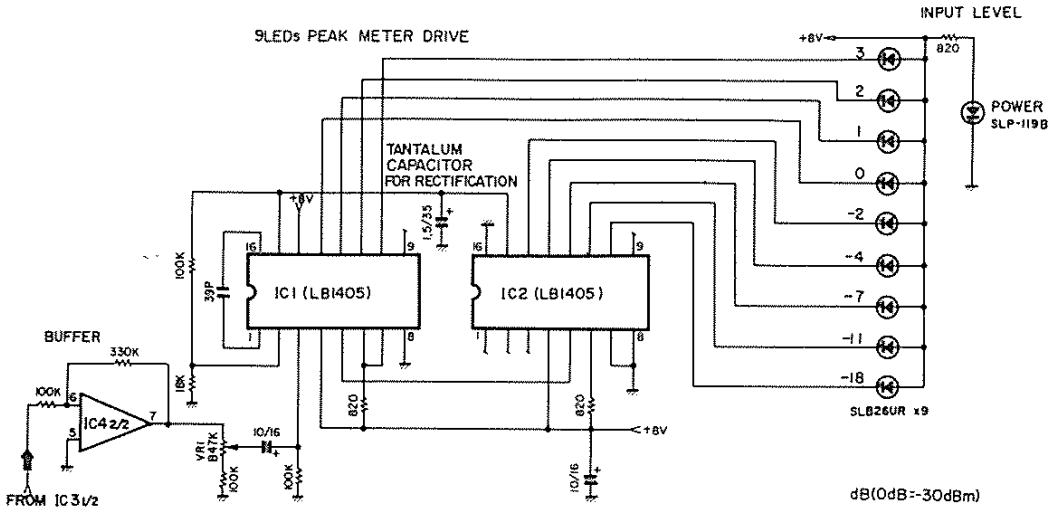

LM3211

Part No.	iG00094
made by	TOKYO SANYO

• FUNCTION

Frequency Divider

• OUTLINE DRAWING

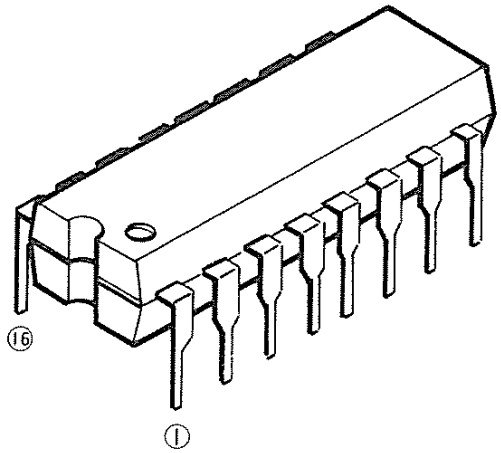

• BLOCK & SCHEMATIC DIAGRAM

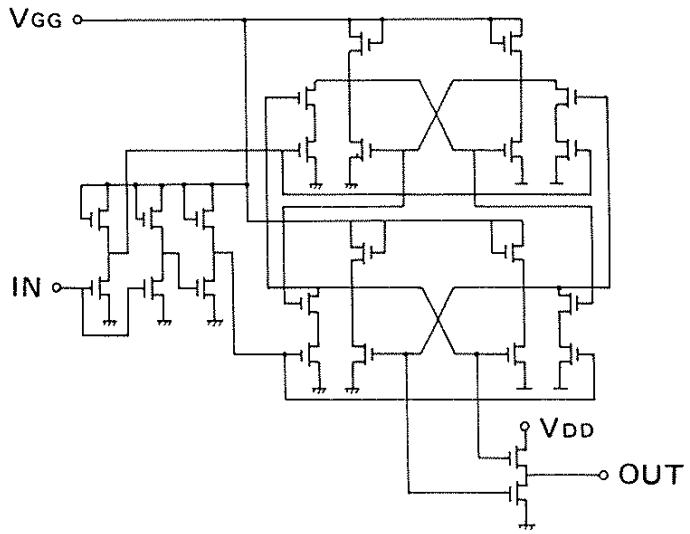

No.	Name	Description	No.	Name	Description
1	$\overline{SD}$	TEST POINT	16	O_1	Output
2	I_1	INPUT	15	O_2	
3	I_2		14	O_3	
4	I_3		13	O_4	
5	I_4		12	O_5	
6	I_5		11	O_6	
7	I_6		10	VDD	–9v DC Supply
8	GND	Ground	9	VGG	–26V DC Supply

● CIRCUIT ILLUSTRATION

MODEL **SS-30**

CIRCUIT BOARD . . $G_1 \sim G_4$

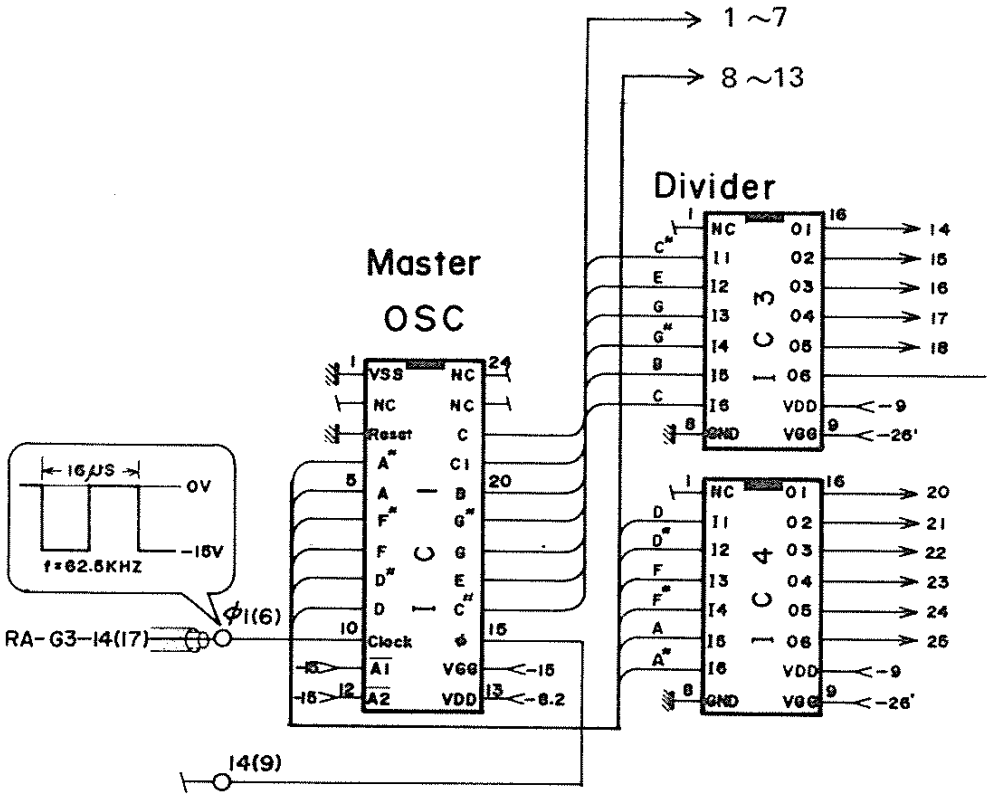

IC3 & 4 ..... LM3211

M54516P

Part No.	iG03110
made by	MITSUBISHI

- FUNCTION

5 unit Transistor Array

- OUTLINE DRAWING

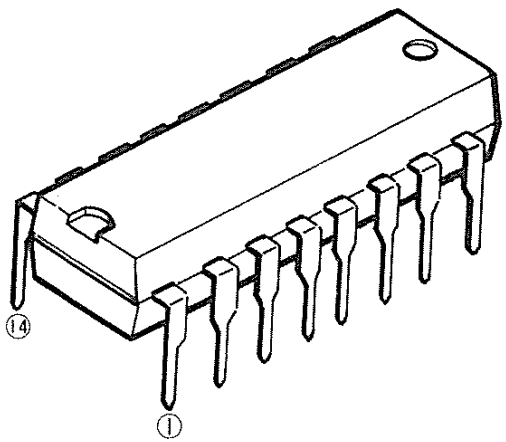

- BLOCK & SCHEMATIC DIAGRAM

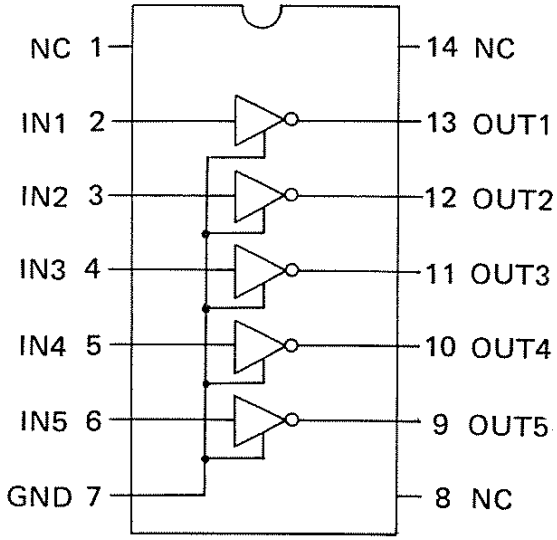

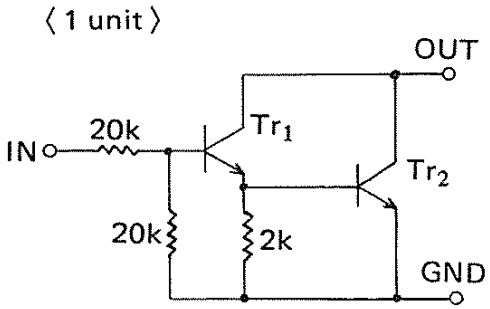

No.	Name	Description	No.	Name	Description
1	NC	Non-Connection	14	NC	Non-Connection
2	IN1	Input 1	13	OUT1	Output 1
3	IN2	" 2	12	OUT2	" 2
4	IN3	" 3	11	OUT3	" 3
5	IN4	" 4	10	OUT4	" 4
6	IN5	" 5	9	OUT5	" 5
7	GND	Ground	8	NC	Non-Connection

• CIRCUIT ILLUSTRATION

MODEL **CS-20M**

CIRCUIT BOARD .. **PGM**

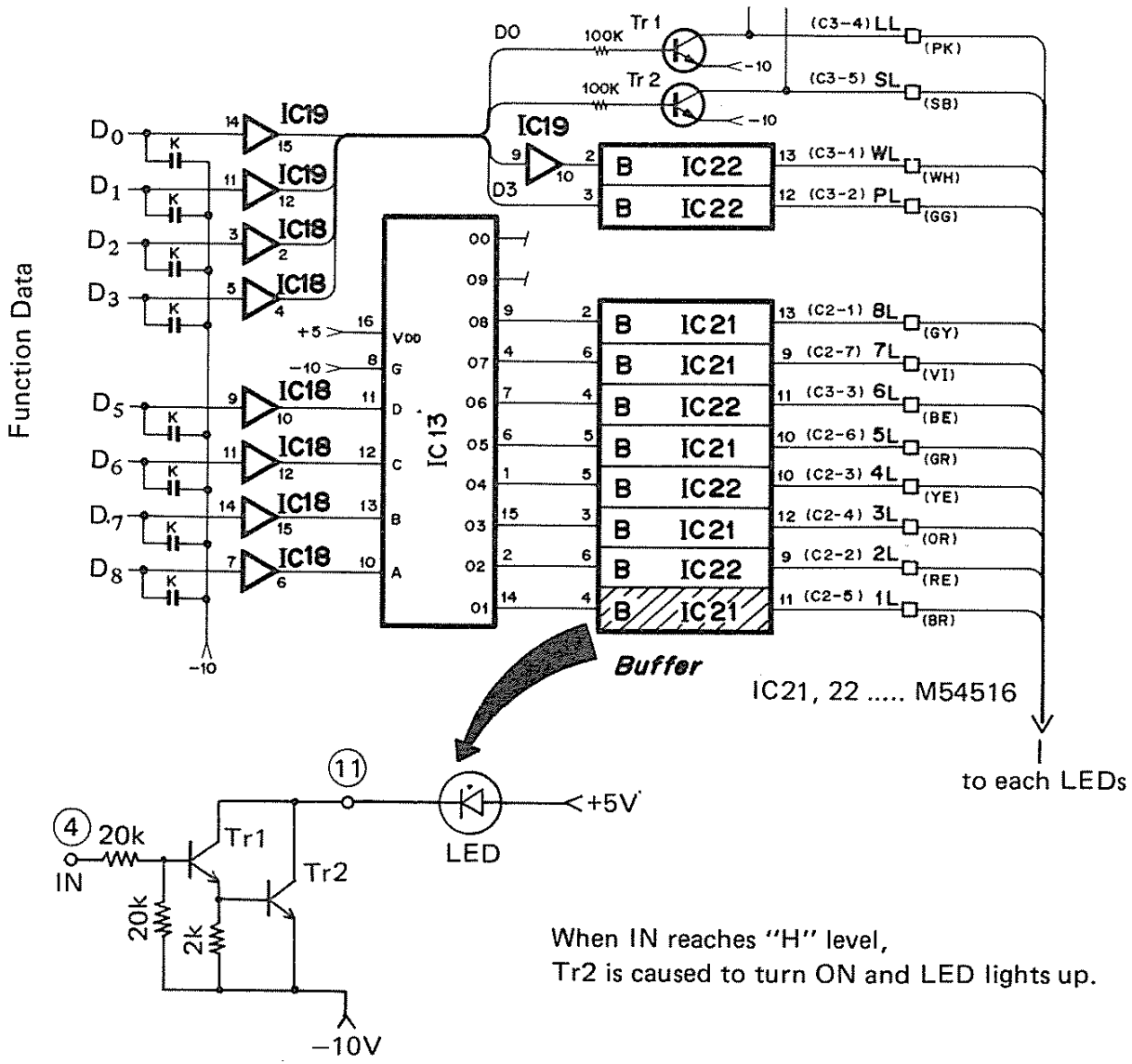

When IN reaches "H" level,
Tr2 is caused to turn ON and LED lights up.

M58981S-45

Part No.	iG035910
made by	MITSUBISHI

• FUNCTION

1024 x 4 bit Static RAM

• OUTLINE DRAWING

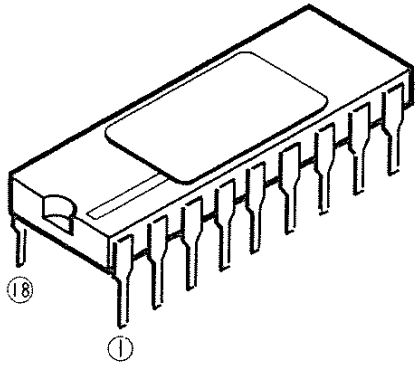

• BLOCK & SCHEMATIC DIAGRAM

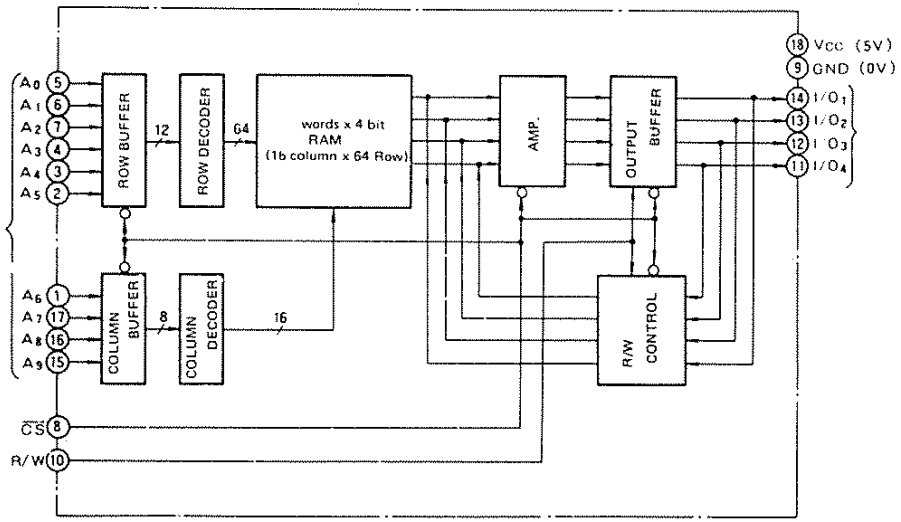

No.	Name	Description	No.	Name	Description
1	A_6	Address Data Input	18	Vcc	+5 Volt Power Supply
2	A_5		17	A_7	Address Data Input
3	A_4		16	A_8	
4	A_3		15	A_9	
5	A_0		14	I/O_1	Data Input/Output
6	A_1		13	I/O_2	
7	A_2		12	I/O_3	
8	$\overline{CS}$	Chip Select Input	11	I/O_4	
9	GND	Ground 0V	10	R/W	R/W command Input

• CIRCUIT ILLUSTRATION

MODEL **CS-40M**

CIRCUIT BOARD . . **PGM**

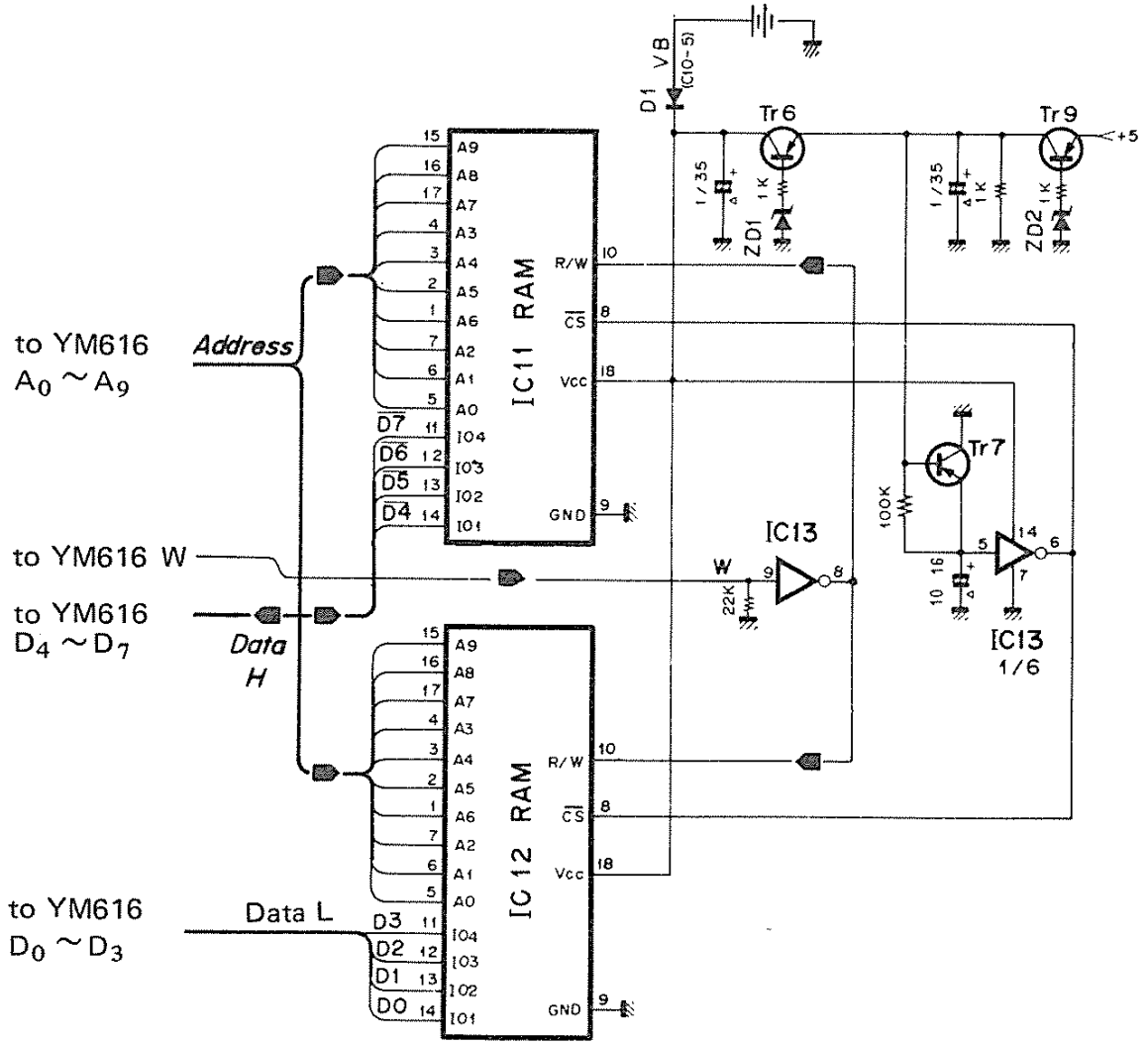

IC11, 12 ..... M58981S-45

M5L5101LP-1

Part No.	iG03601
made by	MITSUBISHI

- **FUNCTION**

256 x 4 bit Static RAM

- **OUTLINE DRAWING**

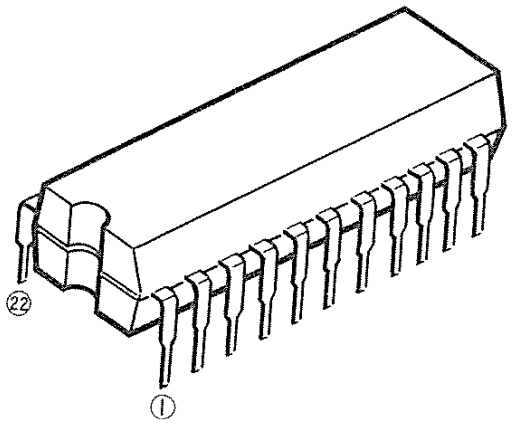

[Interchangeable parts]

P5101L-1 ..... INTEL

No.	Name	Description	No.	Name	Description
1	A_3	Address Data Input	22	Vcc	+5V Power Supply
2	A_2		21	A_4	Address Data Input
3	A_1		20	R/W	R/W Command Input
4	A_0		19	$\overline{CS_1}$	Chip Select Input 1
5	A_5		18	OD	Output Disable
6	A_6		17	CS_2	Chip Select Input 2
7	A_7		16	DO_4	Data Output 4
8	GND	Ground 0V	15	DI_4	Data Input 4
9	DI_1	Data Input 1	14	DO_3	Data Output 3
10	DO_1	Data Output 1	13	DI_3	Data Input 3
11	DI_2	Data Input 2	12	DO_2	Data Output 2

• CIRCUIT ILLUSTRATION

MODEL **CS-20M**

CIRCUIT BOARD .. **PGM**

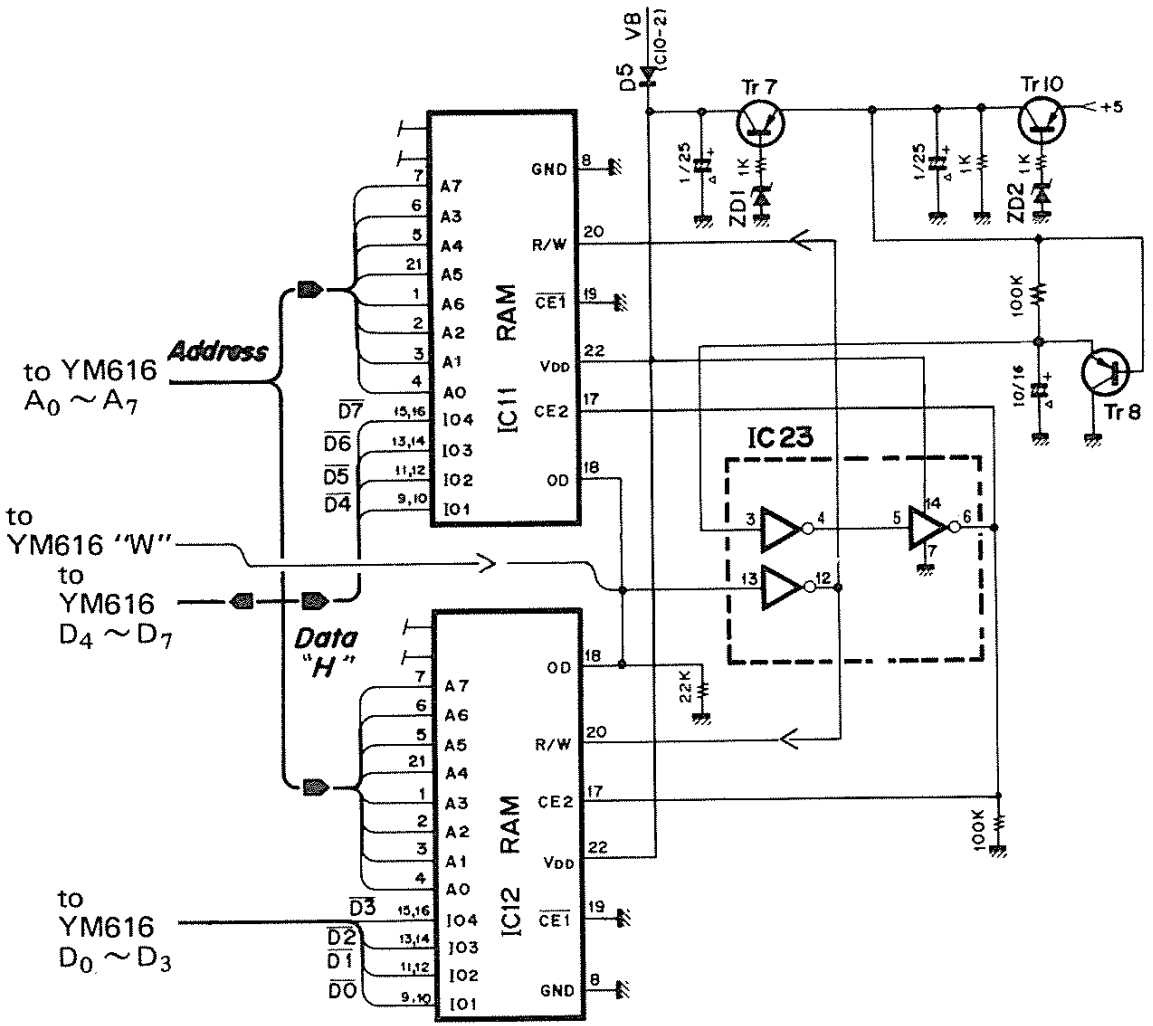

IC11, 12 ..... M5L5101LP-1

MM5837

Part No.	iG03400
made by	NSC

FUNCTION

Digital Noise Source

OUTLINE DRAWING

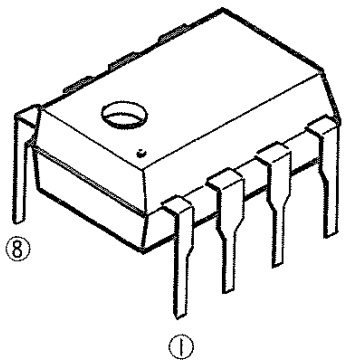

BLOCK & SCHEMATIC DIAGRAM

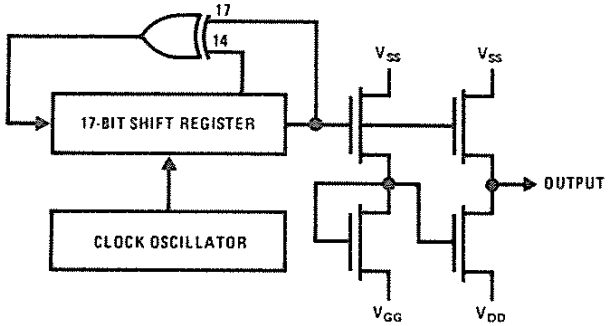

No.	Name	Description	No.	Name	Description
1	VDD	(GND)			
2	VGG	(GND)			
3	Out	Noise source output			
4	Vss	+DC voltage supply			
5	NC	Non-connection			
6	NC				
7	NC				
8	NC				

• CIRCUIT ILLUSTRATION

MODEL PM-2000

CIRCUIT BOARD . . TALK BACK

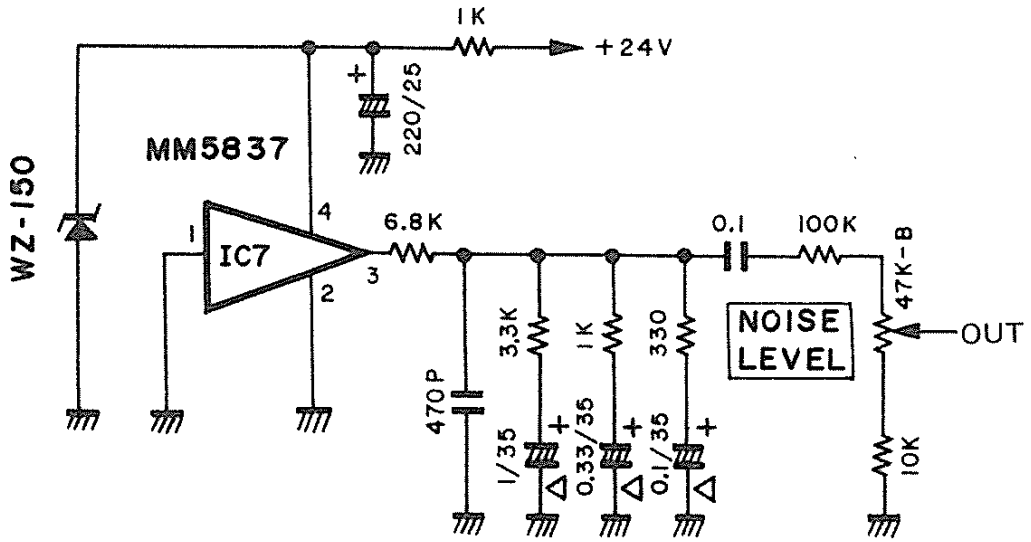

PINK NOISE OSC

MN3101

Part No.	iG03750
made by	MATSUSHITA

• FUNCTION

BBD Clock Driver

• OUTLINE DRAWING

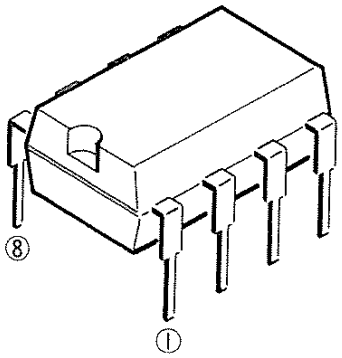

• BLOCK & SCHEMATIC DIAGRAM

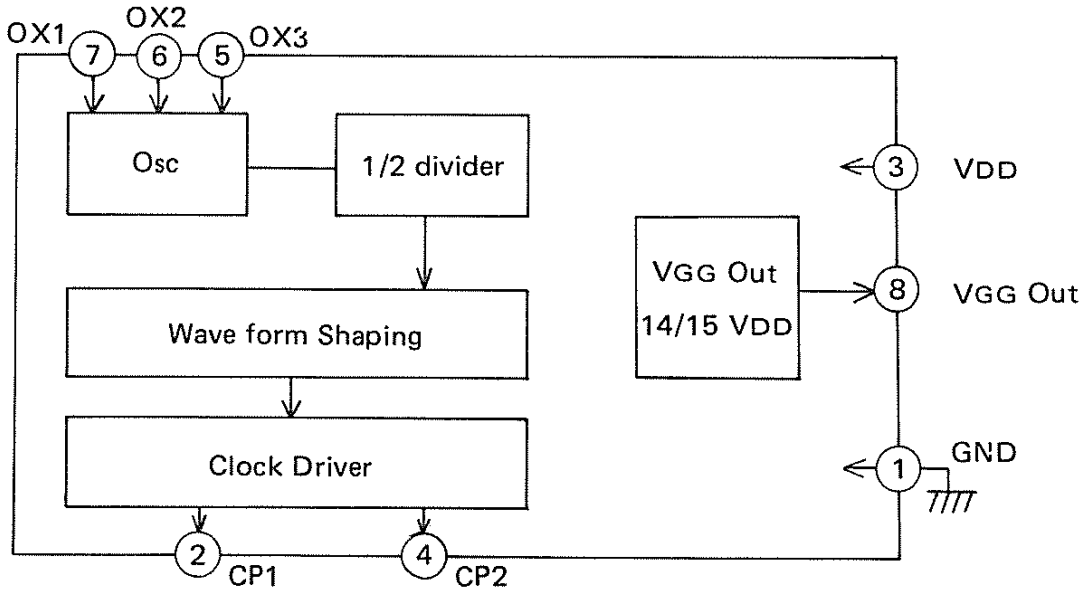

No.	Name	Description	No.	Name	Description
1	GND	Ground	8	VGGOut	VGG Output VGG = 14/15 VDD
2	CP1	Clock out 1	7	OX1	C.R (for Oscillation)
3	VDD	—DC voltage supply	6	OX2	C.R (")
4	CP2	Clock out 2	5	OX3	C.R (")

• CIRCUIT ILLUSTRATION

MODEL **E1005**

CIRCUIT BOARD .. **FM**

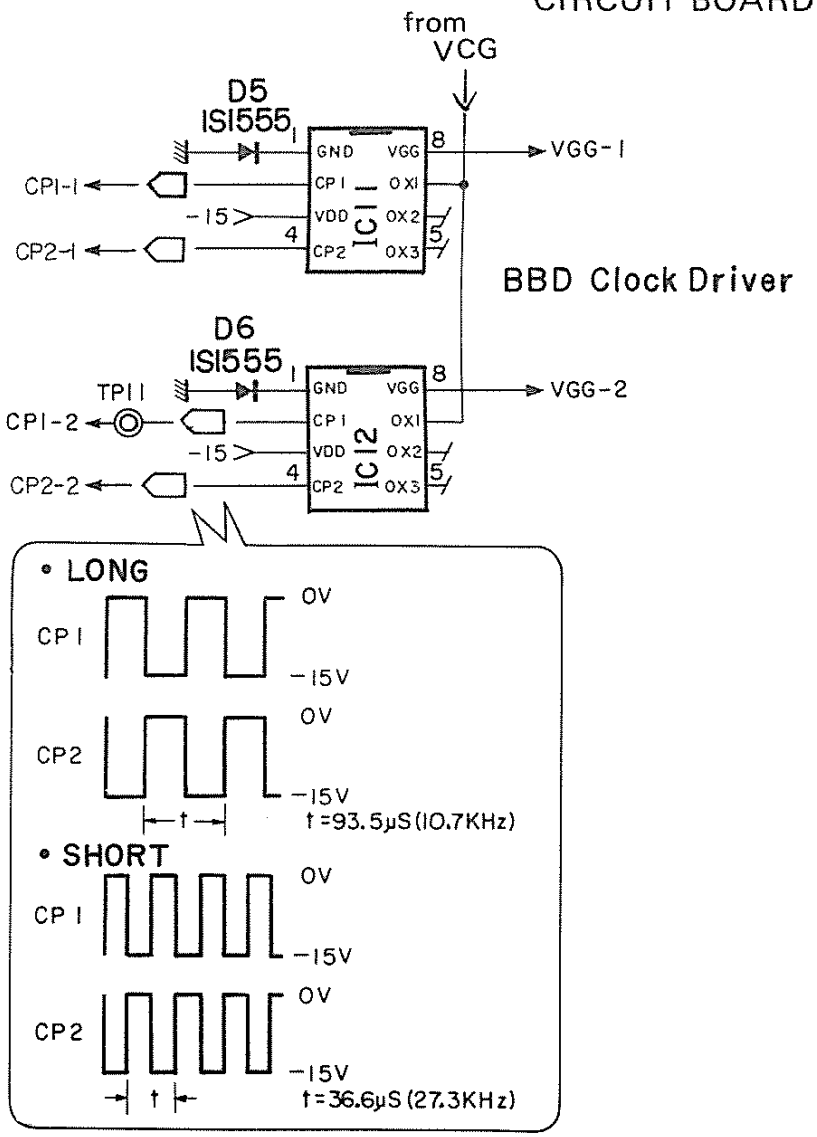

IC11, 12 ..... MN3101

NE570N

Part No.	iG03130
made by	SIGNETICS

- FUNCTION

COMPANDER

- OUTLINE DRAWING

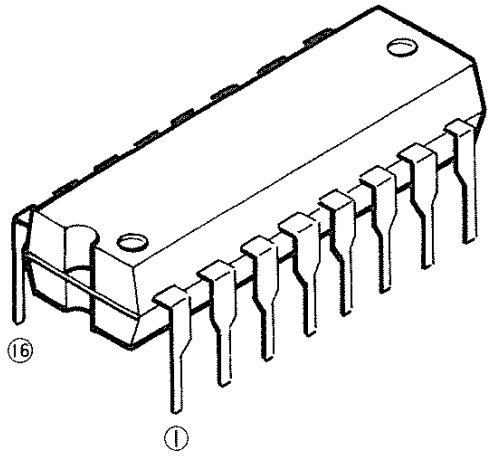

- BLOCK & SCHEMATIC DIAGRAM

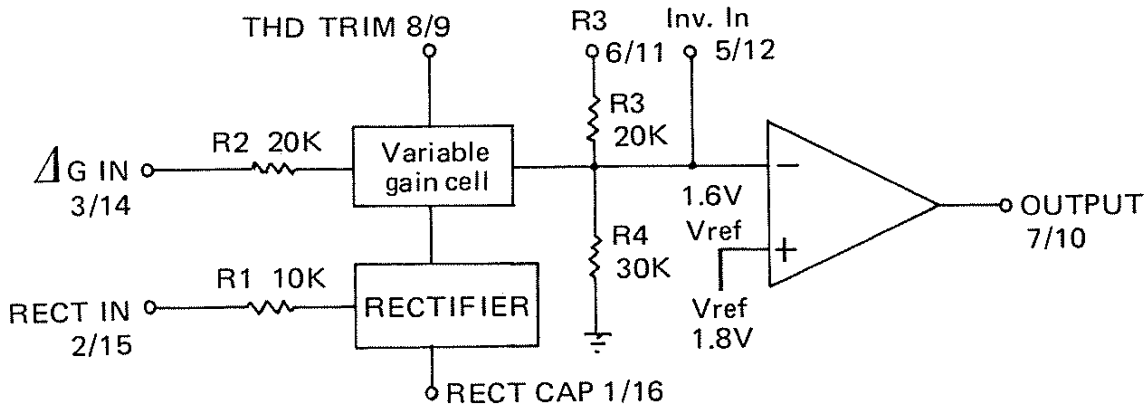

No.	Name	Description	No.	Name	Description
1	Rect.Cap1	Capacitor for rectification 1	16	Rect.Cap2	Capacitor for rectification 2
2	Rect.IN1	Rectifier input 1	15	Rect.IN2	Rectifier input 2
3	G Cell IN1	Variable gain cell input 1	14	G Cell IN2	Variable gain cell input 2
4	GND	Ground	13	Vcc	+15V DC voltage supply
5	Inv. IN1	Inverting input 1	12	Inv. IN2	Inverting input 2
6	R_3 1	Internal resistar (R_3=20KΩ) 1	11	R_3 2	Internal resistar (R_3=20KΩ) 2
7	OUT1	Output 1	10	OUT2	Output 2
8	THD Trim1	Trim1 : Gain cell distortion	9	THD Trim2	Trim2 : Gain cell distortion

• CIRCUIT ILLUSTRATION

MODEL **E1010**

CIRCUIT BOARD . . **FP**

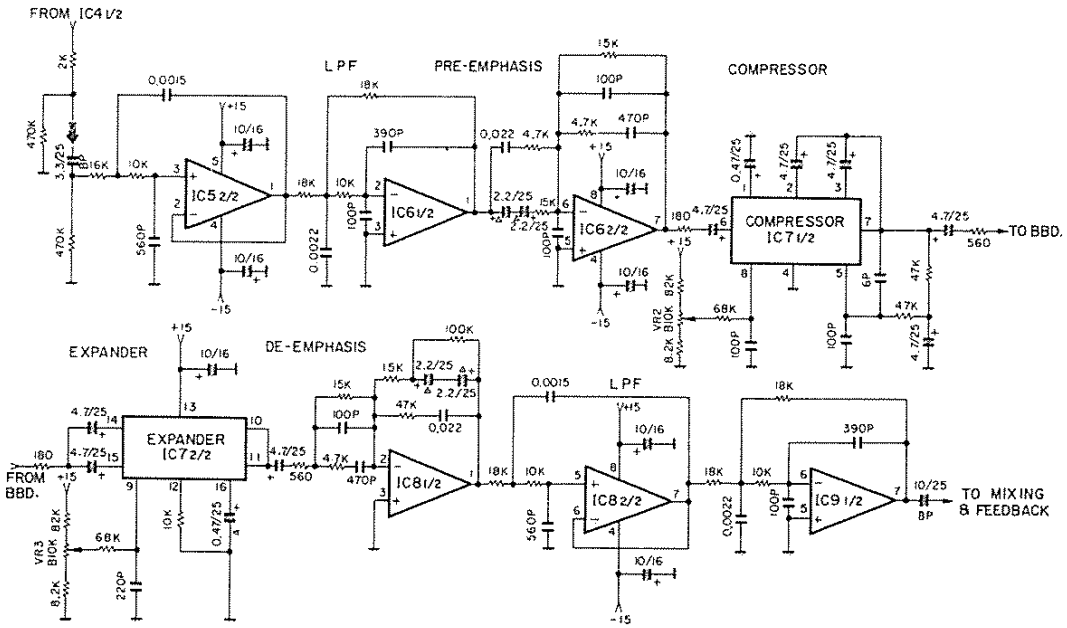

IC7 ..... NE570N

NE80100

Part No.	NE80100
made by	YAMAHA

● FUNCTION

OP. Amp Module

● OUTLINE DRAWING

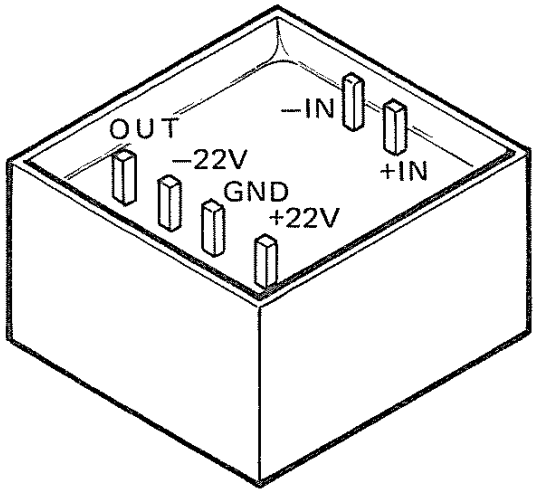

● BLOCK & SCHEMATIC DIAGRAM

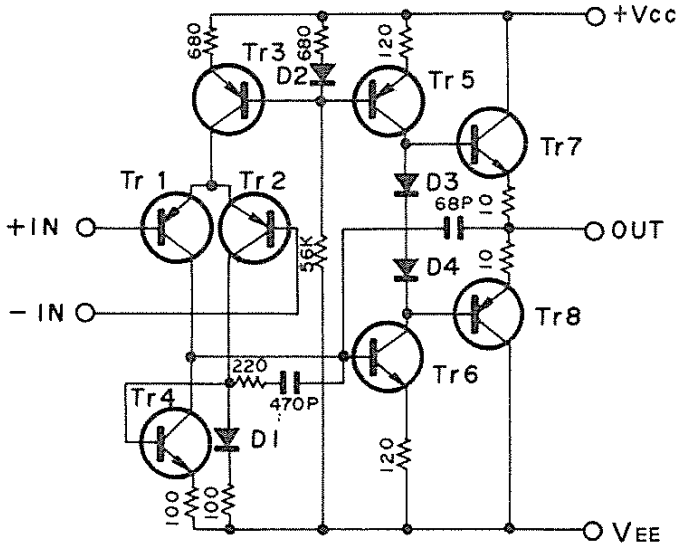

No.	Name	Description	No.	Name	Description
	+ IN	Non-Inverting Input			
	− IN	Inverting Input			
	Vcc	+DC voltage supply			
	GND	Ground			
	VEE	−DC voltage supply			
	OUT	Signal Output			

• CIRCUIT ILLUSTRATION

MODEL PM-2000

CIRCUIT BOARD . . TALK BACK

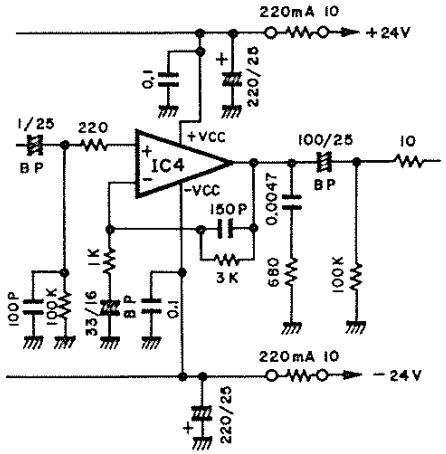

NE80200

Part No.	NE80200
made by	YAMAHA

- FUNCTION

OP. Amp Module

- OUTLINE DRAWING

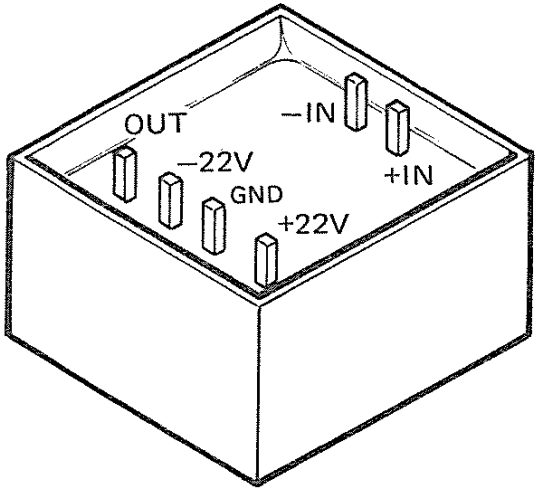

- BLOCK & SCHEMATIC DIAGRAM

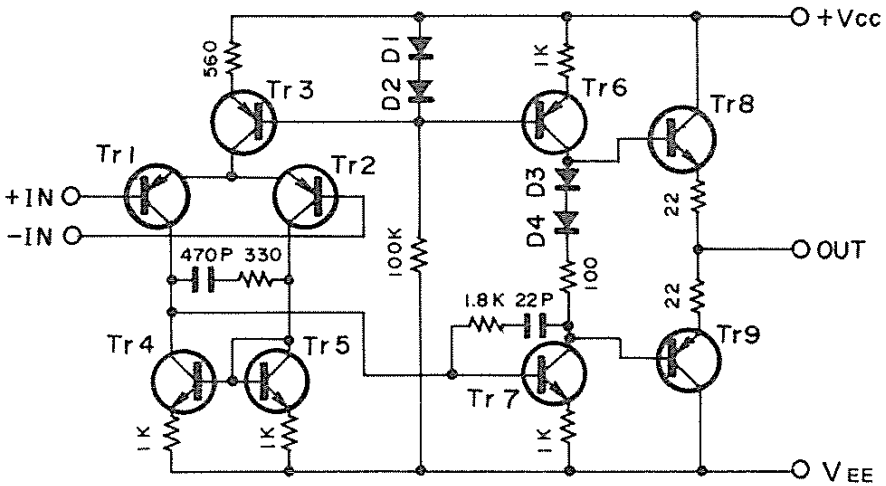

No.	Name	Description	No.	Name	Description
	+ IN	Non-Inverting Input			
	− IN	Inverting Input			
	Vcc	+DC voltage supply			
	GND	Ground			
	VEE	−DC voltage supply			
	Out	Signal Output			

• CIRCUIT ILLUSTRATION

MODEL PM-2000

CIRCUIT BOARD . .TALK BACK

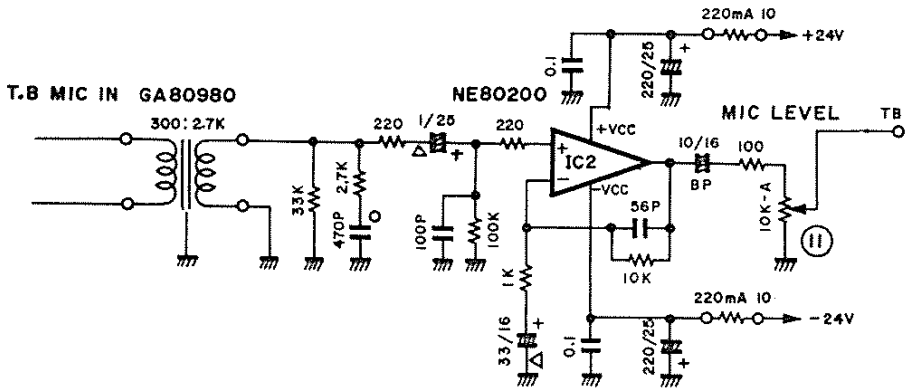

μA796HC

Part No.	iG00162
made by	FAIRCHILD

- FUNCTION

RING MODULATOR

- OUTLINE DRAWING

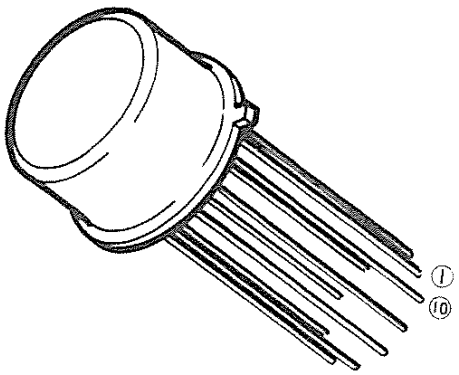

- BLOCK & SCHEMATIC DIAGRAM

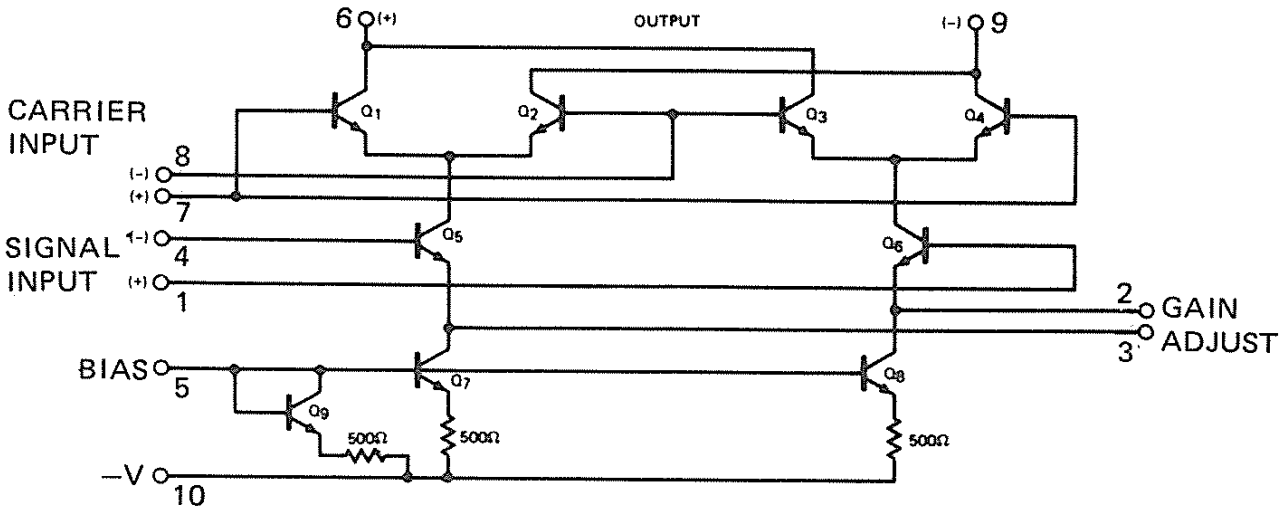

No.	Name	Description	No.	Name	Description
1	+Sin	+ Signal input	10	–V	–DC voltage supply or GND
2	Gain	Gain adjust	9	–Out	– Output
3	Gain	Gain adjust	8	–Cin	– Carrier input
4	–Sin	– Signal input	7	+Cin	+ Carrier input
5	I adj	Bias adjust	6	+Out	+ Output

• CIRCUIT ILLUSTRATION

MODEL **CS-40M**

CIRCUIT BOARD . . **PB**

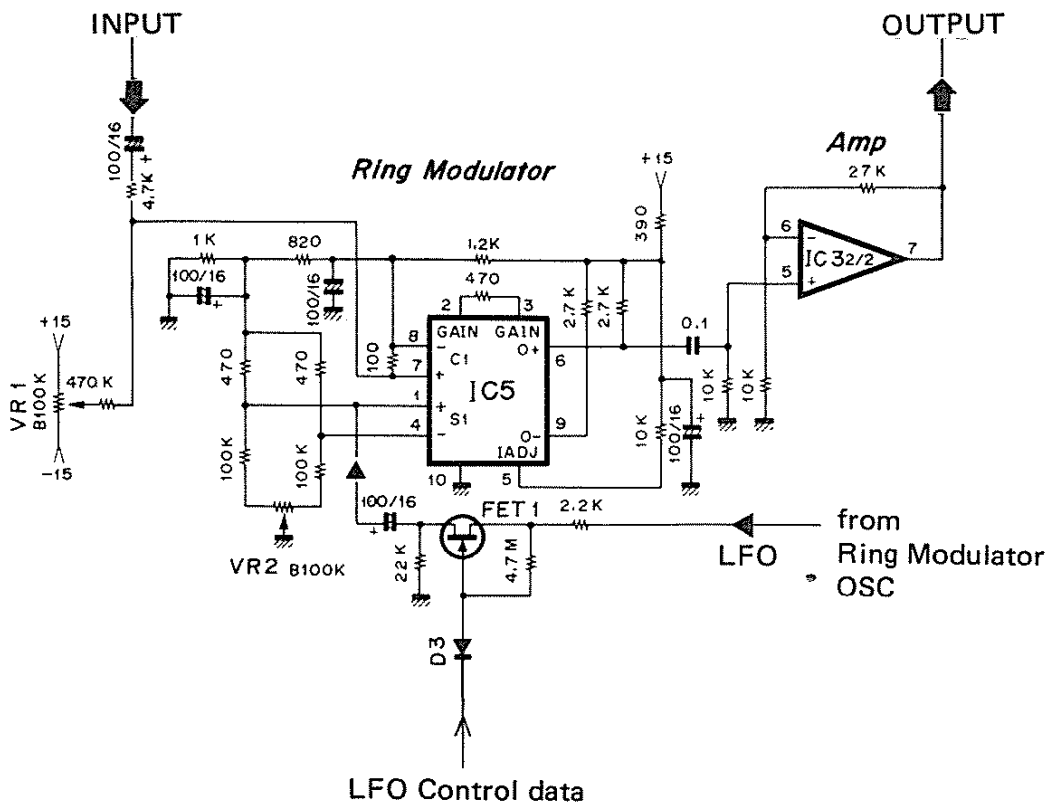

SINCE 1887 YAMAHA

NIPPON GAKKI CO., LTD. HAMAMATSU, JAPAN

80, 4, 1.5 K ⊖